Knight Consulting Engineers, Inc.

REPORT OF

STRUCTURAL & GEOTECHNICAL INVESTIGATION

-

FAIRVIEW TERRACE & UPPER GATE STREET RETAINING WALLS

HARTFORD, VERMONT

FOR

TOWN OF HARTFORD

VERMONT

Prepared by:

Knight Consulting Engineers, Inc.
51 Knight Lane
Williston, VT 05495

Report Issued: September 30, 2013
Report Revised: December 13, 2013

KCE Knight Consulting Engineers, Inc.

December 13, 2013

Richard Menge, Public Works Director
Town of Hartford
171 Bridge Street
White River Junction, VT 05001

Re: Structural & geotechnical investigation for the existing retaining walls along Fairview Terrace and upper Gate Street in Hartford, VT.

Dear Richard:

This is a report of our findings related to 4 existing retaining walls along Fairview Terrace and upper Gate Street in Hartford, Vermont. These findings are based upon inspection and measurements of the exposed portions of the retaining walls combined with interpretation of the subsurface conditions adjacent to those retaining walls. Geotechnical properties are based upon 9 soil borings performed by Mike's Boring & Coring (MB&C) of East Barre, Vermont. DIG-SAFE was contacted to locate utilities near the proposed borings (DIG-SAFE #2013-141-2957 & #2013-150-2513). Water, sewer and storm drain lines were located by the Town of Hartford. These boring locations along with the various repair options are represented on the base plan created by Summit Engineering, Inc.

No attempt was made by Knight Consulting Engineers to investigate for the presence, extent or nature of hazardous or toxic substances.

We appreciate the opportunity to conduct this investigation, and stand ready to assist in future phases of this project.

Sincerely,

Eric Goddard

Eric Goddard, P.E.
Senior Vice President
13172_Report (12-13-2013).doc

STATE OF VERMONT
ERIC H. GODDARD
No. 6035
REGISTERED
PROFESSIONAL ENGINEER

51 Knight Lane | Williston, VT 05495 | Tel: 802-879-6343 | Fax: 802-879-6376 | kcevt.com

TABLE OF CONTENTS

	PAGE
DESCRIPTION OF EXPLORATION PROGRAM	1
BACKGROUND & SITE OVERVIEW	2
SUBSURFACE CONDITIONS	4
IMMEDIATE ACTIONS & TEMPORARY REPAIR OPTIONS	6
PERMANENT REPAIR OPTIONS (SEGMENT 1)	8
PERMANENT REPAIR OPTIONS (SEGMENT 2)	11
CONCLUSIONS, RECOMMENDATIONS & CAPITAL PLAN	12

* * * * * *

APPENDIX A – LOCATION MAP
1988 U.S.G.S. Topographic Map (Hanover, NH)

APPENDIX B - BORING LOGS

APPENDIX C – SEGMENT 1B TEMPORARY REPAIR OPTIONS
Option T0 – Close Upper Gate Street to Vehicular Traffic (Pedestrians Only)
Option T1 – Make Upper Gate Street 1-Lane & Add Temp. Guard Rail/Sidewalk
Option T2 – Stabilize Upper Gate with Fill & Add Temp. Guard Rail/Sidewalk

APPENDIX D – SEGMENTS 1A & 1B PERMANENT REPAIR OPTIONS
Option 0 – Close Segment 1B & Stabilize Segment 1A with Stone Fill
Option 1 – Make Segment 1B (1-Lane) & Stabilize Segment 1A with Stone Fill
Option 2 – Stabilize 1A & 1B Walls with Sloping Stone Fill (Move House)
Option 3 – Stabilize 1A & 1B Walls with Sloping Stone Fill (Save House)
Option 4 – Stabilize 1A & 1B Walls w/ Sloping Stone Fill & Redi-Rock Toe Wall
Option 5 – Stabilize 1A & 1B Walls with Cantilevered Steel Sheeting
Option 6 – Stabilize 1A & 1B Walls with Anchored Steel Sheeting
Option 7 – Stabilize 1A & 1B Walls with Anchored Steel Sheeting & Soldier Piles
Option 8 – Total Reconstruction with New Concrete Retaining Wall

APPENDIX E – SEGMENT 2 TEMPORARY & PERMANENT REPAIR OPTIONS
Option T1 – Add Temporary Guard Rail to Create Sidewalk
Option 1 – Stabilize Segment 2 Wall with Cantilevered Steel Sheeting
Option 2 – Stabilize Segment 2 Wall with Tiebacks & New Concrete Face
Option 3 – Total Reconstruction with New Concrete Retaining Wall

DESCRIPTION OF EXPLORATION PROGRAM

The soil investigation was comprised of 6 truck borings (B-1, B-2, B-3, B-3A, B-3B & B-4) and 3 hand borings (B-1A, B-2A & B-4B) taken along Fairview Terrace and Gate Street in Hartford, Vermont. Truck borings were performed using hollow stem augers and Standard Penetration Test (SPT) split-spoon sampling procedures. All truck borings were performed using 5-foot sampling. Hand borings were performed using modified sampling procedures. All hand borings were performed using 5-foot sampling. These borings were used to establish soil strength parameters which were used in evaluation of the various repair options. The soil boring logs are contained in **Appendix B** and the soil boring locations are indicated on the Options Site Plans contained in **Appendix C, D & E.**

Truck borings were advanced by use of hollow stem augers and SPT sampling procedures. In this method, the augers are advanced to a predetermined sampling depth. A standard 2" OD split spoon sampler is attached to the end of the drill rod and driven out ahead of the open end of the hollow augers. The SPT value (units are blows per foot) is recorded as the sum of the number of blows of a 140 pound hammer, free falling 30 inches, required to drive the sampler over the second and third of four 6 inch increments. Once the SPT value is recorded and a disturbed sample obtained, the augers are advanced to the next sampling depth and the process is repeated.

Hand borings were advanced by use of a modified SPT sampling procedure. In this method, a 1.3" OD solid spoon sampler is attached to the end of a ¾" drill rod and driven into the soil. The modified SPT value (units are blows per foot) is recorded as the sum of the number of blows of a 35 pound hammer, free falling 24 inches, required to drive the sampler 12 inches. Once the modified SPT value is recorded and a disturbed sample obtained, the process is repeated, starting at the bottom of the previous sample depth. This process works as long as the hole stays open. Designers should be noted that in order to obtain an equivalent N_{60} SPT number, the blow-counts should be reduced by approximately 55% to 60%.

It should be noted that the information reported on the boring logs is a field interpretation by the boring contractor, and does not always match the engineer's interpretation, which is based on inspection and/or laboratory analysis of the submitted samples.

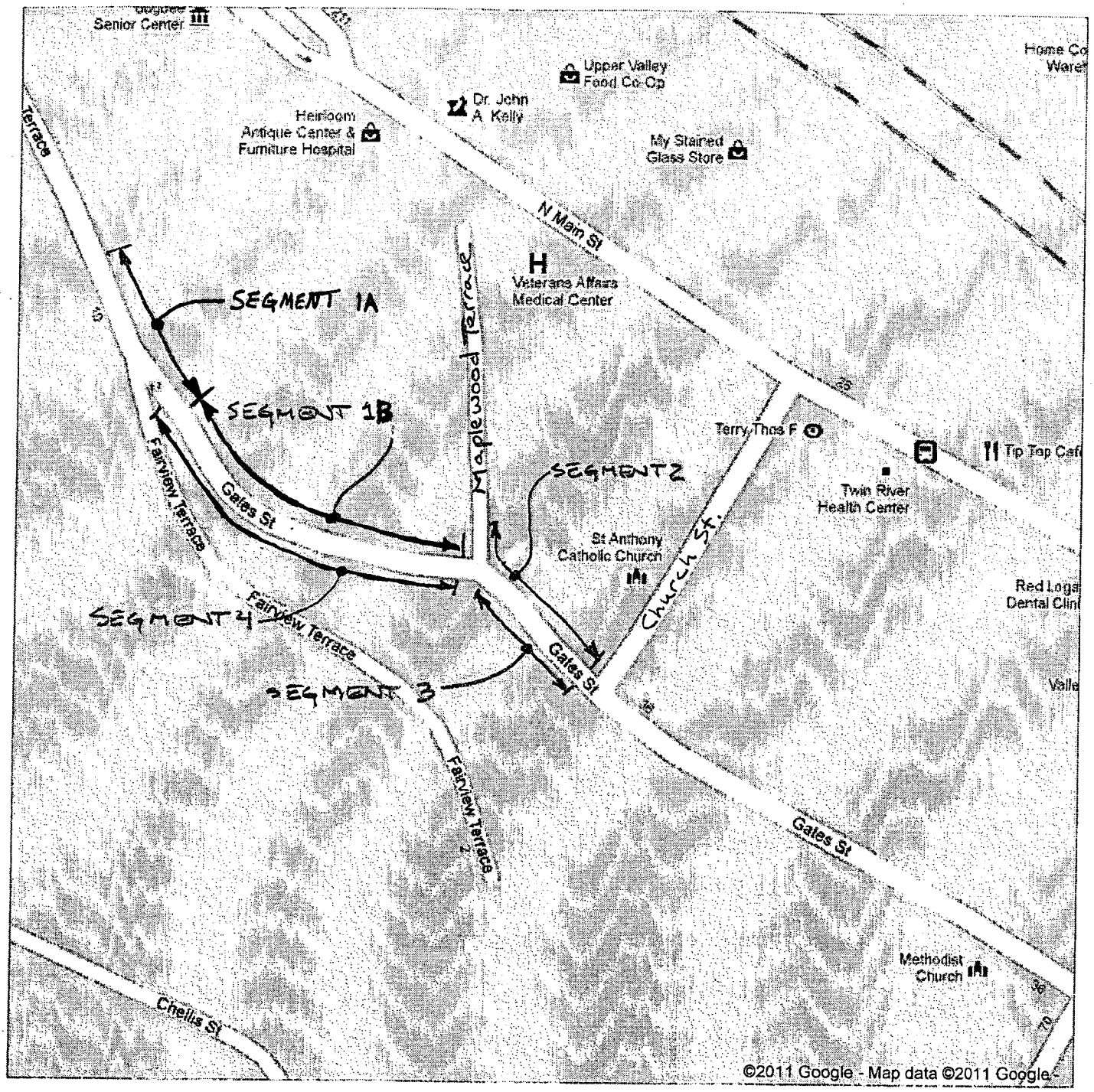

Location Map
Hartford, VT
1" = 120'

KCE KNIGHT CONSULTING ENGINEERS, INC.
P.O. BOX 29, WILLISTON VT 05495 (802) 879-6343

BACKGROUND & SITE OVERVIEW

Segment 1A (Downhill side of Fairview Terrace): Approximately 225 feet of concrete wall (STA 0+00 to STA 2+25 on the site plans) running north of the intersection with Gate Street; exposed heights range from 2.5 to 10 feet. Fairview Terrace runs along the upper side of this wall. The existing wall sits atop an existing steep wooded slope. Inspection of the downhill side of the wall revealed at least 2 areas of erosion where stormwater runoff from the roadway has undermined the wall and exposed the fill behind the wall. Based upon input from the Town, these eroded areas have been filled and the low-points have been paved. Inspection of the exposed areas of the wall indicated that the wall is approximately 24" thick at the bottom and is embedded into the soil approximately 16" to 20". No footing was observed at the bottom of this wall. This segment has a 4-foot wide pedestrian sidewalk along the top of the retaining wall. This wall segment is in poor condition with a non-compliant guardrail and presents a risk to the public. The condition of the wall does not allow for attachment of a bridge rail complying with AOT standards and the width of the top of the wall makes situating a guard rail difficult within the existing space.

Segment 1B (Downhill side of Upper Gate Street): Approximately 275 feet of dry-stacked field stone capped with concrete (STA 2+25 to STA 5+00 on the site plans) running between Maplewood Terrace and Fairview Terrace; exposed heights range from 3 to 15 feet. Gate Street runs along the upper side of this wall. The existing wall sits atop an existing steep slope. It is our firm's opinion that Gate Street was originally a narrow (one-lane) road cut into the slope with a single stone retaining wall. In an effort to widen the road, our firm believes that the roadway was raised approximately 3 feet by adding a vertical concrete extension on top of the original field stone wall. In addition to raising the road, upper Gate Street was widened by cutting a 6.5'-high concrete gravity wall into the steep slope on the uphill side of the street. This segment has no sidewalk which forces pedestrians to walk in the roadway. Steep, curving grades combined with a narrow travelled way and poor visibility make this a dangerous situation for pedestrians trying to commute to and from downtown. Inspection of this portion of the street revealed evidence of significant lateral movement in the form of severe lateral displacement of the roadway edge (2 to 3 feet) combined with severe vertical settlement of the roadway surface (up to 1 foot) adjacent to the wall. One of the adjacent property owners reported that the middle portion of this section failed and had to be re-built using large Rip Rap. This property owner also indicated that rocks occasionally fall from this repair area. This wall segment is in very poor condition with a non-compliant guardrail and presents the greatest risk to the public. The condition of the wall does not allow for attachment of a bridge rail complying with AOT standards and limited space makes situating a guard rail difficult.

Segment 2 (Downhill side of Lower Gate Street): Approximately 87 feet of a 2-step concrete wall transitioning to a steep slope on top of a 45 feet of a 2' to 4'-high curved, decorative stone and mortar wall running between Church Street and Maplewood Terrace; exposed heights range from 0.8 to 11.6 feet. Gate Street runs along the upper side of this wall. The existing wall sits on essentially level ground. It is our firm's opinion that this portion of Gate Street may also have been raised at some point in the past as evidenced by the apparent 2-stage construction of the concrete wall. In an effort to widen the road, our firm believes that the roadway was raised up to 4 feet by adding a concrete extension on top of the original concrete gravity wall. In addition to raising the road, lower Gate Street was widened by cutting an 8'-high galvanized steel wall into the steep wooded slope on the uphill side of the street. This segment has no sidewalk which forces pedestrians to walk in the roadway. Unlike Segment 1B, this segment is straighter, wider and has better visibility. This segment is in fair condition with an AOT compliant guard rail.

Segment 3 (Uphill side of Lower Gate Street): Approximately 120 feet of a galvanized steel wall running between Church Street and Maplewood Terrace; exposed heights range from 1.3 to 8.5 feet. Gate Street runs along the lower side of this wall. The base of the existing wall follows the profile elevation of lower Gate Street. This wall is comprised of U-shaped galvanized soldier piles (8-gage) with a 9° batter and spaced at 10 feet horizontally. Horizontal galvanized Z-sections (14-gage) span between the soldier piles. It is our firm's opinion that this portion of Gate Street was originally a narrow (one-lane) road cut into the slope with just a short concrete retaining wall on the low side of the road. This portion of Gate Street may have been raised up to 4 feet at some point in the past as evidenced by the apparent 2-stage construction of the lower concrete wall. In addition to raising the road, lower Gate Street was widened by cutting the 8'-high galvanized steel wall into the steep wooded slope on the uphill side of the street. This wall segment is in good condition. Because the stability of this wall depends, in part, on the presence of the lower wall, all repair options for Segment 2 include long-term stabilization of Segment 3.

Segment 4 (Uphill side of Upper Gate Street): Approximately 310 feet of concrete gravity wall (STA 2+05 to STA 5+00 on the site plans) running between Maplewood Terrace and Fairview Terrace; exposed heights range from 5.8 to 6.8 feet. Gate Street runs along the lower side of the wall. The existing wall sits at the bottom of an existing steep wooded slope and the base of this wall follows the profile elevation of upper Gate Street. It is our firm's opinion that Gate Street was originally a narrow (one-lane) road cut into the slope with just a retaining wall on the low side of the road. In an effort to widen the road, our firm believes that upper Gate Street was raised approximately 3 feet and this 6.5'-high concrete gravity wall was cut into the bottom of the upper steep slope. This wall segment is in good condition. Stability calculations performed on this gravity wall indicate a slight deficiency in the sliding resistance. While this slight deficiency does not appear to be manifested in any visible wall distress, it should be addressed as part of the long-term capital improvement plan. Because the stability of this wall depends, in part, on the presence of the lower wall, all repair options for Segment 1B include long-term stabilization of Segment 4.

SUBSURFACE CONDITIONS

General: The borings indicate that the existing soils are granular in nature and that the groundwater depths are deep enough to not be a significant factor. Soil density ranges from loose to medium dense with the looser soils being located on the slopes downhill of Segments 1A & 1B. These looser soils are likely contributing to some of the wall movement and will limit bearing capacities for retaining wall footings.

Segment 1A (STA 0+95): The (B-1) roadway boring samples indicated that the soils are generally comprised of 18.5 feet of loose-to-medium dense brown fine-to-coarse sand (Damp), then 10 feet of medium dense brown fine-to-coarse sand (Moist), then medium dense brown fine-to-coarse sand (Wet). The (B-1A) boring samples on the downhill side of the retaining wall indicated that the soils are generally comprised of 5 feet of loose brown/gray weathered rock and silty sand (Damp), then 6.5 feet of loose brown medium fine sand (Moist), then medium dense brown medium fine sand (Moist).

Segment 1B (STA 2+55): The (B-2) uphill boring samples indicated that the soils are generally comprised of 10.5 feet of loose-to-medium dense brown fine-to-coarse sand (Moist), then 6 feet of medium dense brown very fine sand with some silt (Moist), then 12 feet of medium dense brown fine sand with a trace of fine gravel (Moist), then medium dense-to-dense brown fine-to-coarse sand (Moist). The (B-2A) boring samples on the downhill side of the retaining wall indicated that the soils are generally comprised of 2.5 feet of very loose brown very fine sand with some silt (Moist), then 5.5 feet of loose brown very fine sand with some silt (Moist), then loose-to-medium dense gray fine-to-coarse sand (Moist).

Segment 1B (STA 4+02): The (B-3) roadway boring samples indicated that the soils are generally comprised of 10 feet of medium dense brown fine sand with some silt & fine gravel (Damp), then 2.5 feet of medium dense brown fine sand (Moist), then medium dense-to-dense brown fine-to-coarse sand with some fine gravel (Dry). The (B-3A) boring samples on the downhill side of the retaining wall indicated that the soils are generally comprised of 3.5 feet of medium dense brown fine sand with some silt & fine gravel (Damp), then 5 feet of dense-to-very dense brown medium fine sand & medium fine gravel (Moist), then medium dense brown fine-to-coarse sand & fine-to-coarse gravel (Moist). The (B-3B) uphill boring samples indicated that the soils are generally comprised of 3.5 feet of loose-to-medium dense brown/gray fine sand with some silt (Moist), then 2.5 feet of medium dense brown fine sand (Wet), then 5 feet of medium dense brown fine-to-coarse sand (Wet), then medium dense-to-dense brown/gray very fine sand & silt (Moist).

Segment 2: The (B-4) roadway boring samples indicated that the soils are generally comprised of 3 feet of dense brown fine-to-coarse sand with some medium fine gravel (Damp), then medium dense brown fine-to-coarse sand (Moist). The (B-4B) uphill boring samples indicated that the soils are generally comprised of 3 feet of medium dense-to-dense brown fine sand with some silt & fine gravel (Moist), then 4.5 feet of loose-to-medium dense brown fine sand with some silt & fine gravel (Moist), then medium dense brown fine sand with some silt & fine gravel (Moist).

Below is a summary of the boring locations:

Boring	Segment	STA	Location	Type	Depth
B-1	1A	0+95	Center	Truck	32'
B-1A	1A	0+95	Down Slope	Hand	13'
B-2	1B	2+55	Up Slope	Truck	32'
B-2A	1B	2+55	Down Slope	Hand	10.5'
B-3	1B	4+02	Center	Truck	21'
B-3A	1B	4+02	Down Slope	Truck	12'
B-3B	1B	4+02	Up Slope	Truck	32'
B-4	2	N/A	Center	Truck	16'
B-4B	2	N/A	Up Slope	Hand	10'

IMMEDIATE ACTIONS & TEMPORARY REPAIR OPTIONS:

Our firm has compiled 3 options to address immediate concerns related to Segments 1A, 1B & 2. Total costs for these options range from $25,000 to $430,000 in 2013 dollars. The options looked at 3 conditions for usage of upper Gate Street: (1) closing upper Gate Street, (2) reducing upper Gate Street to 1-lane, and (3) maintaining 2-way traffic on upper Gate Street. All options include provisions to provide safer pedestrian traffic. Refer to **Appendix C** for sketch plans and sections along with projected construction costs.

Segment 1A (Downhill side of Fairview Terrace): Based upon input from the Town, the immediate concerns regarding erosion at 2 locations along the base of the wall have been addressed. Also, the Town has reportedly raised the 2 low-points in the roadway edge in an effort to prevent accidental stormwater runoff. In addition to addressing the immediate erosion issue, the Town should plan on permanently stabilizing the existing concrete wall within the next 5 to 10 years.

Segment 1B (Downhill side of Upper Gate Street): The Town should deal with the unsafe pedestrian traffic on upper Gate Street immediately. Potential options included in this study are: (Option T0 - $20,000) close upper Gate Street to vehicular traffic, (Option T1 - $200,000) install a temporary guard-rail to narrow upper Gate Street to 1 lane and use the remainder of the paved surface as a temporary sidewalk, or (Option T2 - $425,000) permanently widen the downhill embankment along upper Gate Street to install a temporary or permanent sidewalk. Not covered in the scope of this report is the option to find an alternate (safer) route for pedestrians. One potential option is to upgrade an existing path between Fairview Terrace Extension and the Northern Stage Theater building (old dealership property); the feasibility of this alternate route has not been investigated.

In addition to addressing the immediate pedestrian safety issue, the town should plan on permanently stabilizing the existing stone wall on the downhill side of upper Gate Street within the next 5 years. In the meantime, the Town should restrict truck traffic in excess of 6000# on Gate Street between Maplewood Terrace and Fairview Terrace. It is understood that the Town may occasionally need to exceed this weight capacity for plowing and proper maintenance of the road; the Town should strive to use the lightest vehicles feasible for this maintenance. Please note that Options T0, T1 & T2 will reduce dynamic stresses on the existing stone wall. Option T0 includes temporary measures to protect the public from the risk of falling stones/rocks. Option T1 improves the wall stability by lowering the height of the stone wall and sloping from the edge of the temporary sidewalk down to the lowered stone wall. Option T2 permanently stabilizes the stone wall by utilizing the concept in permanent Option 2; the main difference is that the costly infrastructure improvements will be done at a later date.

Segment 2 (Downhill side of Lower Gate Street): The Town should deal with the unsafe pedestrian traffic on Gate Street immediately. One potential option included in this study is (Option T1 – $3,350) to slightly narrow lower Gate Street by installing a guard rail, keeping 2 lanes of traffic and use the remainder of the paved surface as a temporary sidewalk. Another option not covered in the scope of this report is to find an alternate (safer) route for pedestrians. As discussed previously for Segment 1B, one potential option is to upgrade an existing path between Fairview Terrace Extension and the Northern Stage Theater building (old dealership property); the feasibility of this alternate route has not been investigated.

In addition to addressing the immediate pedestrian safety issue, the town should plan on permanently stabilizing the existing concrete wall on the downhill side of lower Gate Street within the next 10 to 15 years. Please note that Option T1 will slightly reduce dynamic stresses on the existing concrete wall.

Segment 3 (Uphill side of Lower Gate Street): This wall segment does not have any deficiencies requiring immediate or long-term action. Because the stability of this wall depends, in part, on the presence of the lower wall, all repair options for Segment 2 include long-term stabilization of Segment 3.

Segment 4 (Uphill side of Upper Gate Street): This wall segment does not have any deficiencies requiring immediate action. Because the stability of this wall depends, in part, on the presence of the lower wall, all repair options for Segment 1B include long-term stabilization of Segment 4.

PERMANENT REPAIR OPTIONS (SEGMENTS 1A & 1B):

Our firm has compiled 9 options to permanently address stabilizing both Segments 1A & 1B. Costs for these options range from $1,060,000 to $3,151,000 in 2013 dollars. The options looked at 3 conditions for usage of upper Gate Street: (1) closing upper Gate Street, (2) reducing upper Gate Street to 1-lane, and (3) maintaining 2-way traffic on upper Gate Street. Eight (8) of the options involve stabilizing the existing walls with either stone fill, Redi-Rock walls, cantilevered sheeting, anchored sheeting or anchored soldier piles. The last option includes complete replacement of the existing retaining walls with a new cantilevered reinforced concrete retaining wall. Soil nail walls and soil-reinforced MSE walls were not considered due to conflicts and restrictions related to utility infrastructure. All improved areas include new pavement, sidewalks, guard rails or bridge rails, waterlines, sewer lines, and storm drains. All options also include stabilization of Segment 4. Refer to **Appendix D** for sketch plans and sections along with projected construction costs.

Option 0 - Close Segment 1B & Stabilize Segment 1A with Stone Fill ($1,060,000): This option involves stabilizing Fairview Terrace and closing upper Gate Street to vehicular traffic and using it for only pedestrian traffic. This option also involves pacing Jersey barriers at both ends and a chain-link fence along the toe of slope below the stone wall to keep people away from the risk of falling stones. Stabilization of Segment 1A will be similar to Option 2 below. This option also includes the cost to repair the existing distressed pavement, install a new sidewalk, guard rail and lighting, plus upgrade the existing 8" waterline, 8" sewer line and 12" storm drain line on Fairview Terrace. The stabilization portion of the work is approximately $520,000 and the infrastructure improvement portion of the work is approximately $540,000 (2013 Dollars).

Option 1 – Segment 1B (1-lane) & Stabilize Segment 1A w/ Stone Fill ($1,787,000): This option involves stabilizing Fairview Terrace and narrowing upper Gate Street to 1-lane using a signal light at each end. This option includes removing the concrete vertical wall extension above the stone wall and re-grading up to the remaining single lane on upper Gate Street. Stabilization of Segment 1A will be similar to Option 2 below. This option also includes the cost to repair the existing distressed pavement, install a new sidewalk and lighting, plus upgrade the existing 8" waterline, 8" sewer line and 12" storm drain line. This option includes a new guard rail on Fairview Terrace and a new bridge rail on upper Gate Street. The stabilization portion of the work is approximately $888,000 and the infrastructure improvement portion of the work is approximately $899,000 (2013 Dollars).

Option 2 – Stabilize 1A/1B Walls w/ Sloping Stone Fill & Move House ($1,962,000): This option involves installing dense-graded crushed stone fill on 1.5:1 Slope to buttress the existing wall. This option includes the cost to repair the existing distressed pavement, install a new sidewalk, lighting and guardrail, plus upgrade the existing 8" waterline, 8" sewer line and 12" storm drain line. This option includes moving 1 house below the wall. The stabilization portion of the work is approximately $878,000 and the infrastructure improvement portion of the work is approximately $1,084,000 (2013 Dollars).

Option 3 – Stabilize 1A/1B Walls w/ Sloping Stone Fill & Save House ($1,880,000): This option involves modifying Option 2 by installing a Redi-Rock wall at the toe of slope near existing house to keep the house in its current location. The stabilization portion of the work is approximately $796,000 and the infrastructure improvement portion of the work is approximately $1,084,000 (2013 Dollars).

Option 4 – Stabilize 1A/1B Walls w/ Sloping Stone Fill & Toe Wall ($2,184,000): This option involves installing dense-graded crushed stone on a 1.8:1 Slope to buttress the existing wall terminating in a stepped Redi-Rock wall and chain-link fence at toe of slope. This option includes the cost to repair the existing distressed pavement, install a new sidewalk, lighting and guardrail, plus upgrade the existing 8" waterline, 8" sewer line and 12" storm drain line. This option impacts vehicle access to the rear of the house at 1 location below the wall. The stabilization portion of the work is approximately $1,100,000 and the infrastructure improvement portion of the work is approximately $1,084,000 (2013 Dollars).

Option 5 – Stabilize 1A & 1B Walls with Cantilevered Steel Sheeting ($3,151,000): This option involves installing cantilevered sheeting on the downhill side of the existing wall and filling the annular space between the sheeting and wall with dense-graded crushed stone. This option includes the cost to repair the existing distressed pavement, install a new sidewalk, lighting and guardrail, plus upgrade the existing 8" waterline, 8" sewer line and 12" storm drain line. Vibration from this option may add to the distress of the existing roadway. Due to the required sheeting depth, additional subsurface exploration will likely be required. The stabilization portion of the work is approximately $2,067,000 and the infrastructure improvement portion of the work is approximately $1,084,000 (2013 Dollars).

Option 6 – Stabilize 1A & 1B Walls with Anchored Steel Sheeting ($2,468,000): This option involves installing anchored sheeting on the downhill side of the existing wall and filling the annular space between the sheeting and wall with dense-graded crushed stone. The sheeting will be anchored using tiebacks into the soil under the roadway and wales to spread the load to the sheeting. This option includes the cost to repair the existing distressed pavement, install a new sidewalk, lighting and guardrail, plus upgrade the existing 8" waterline, 8" sewer line and 12" storm drain line. Vibration from this option may add to the distress of the existing roadway. The depth of the tiebacks may necessitate replacing the existing sewer. The stabilization portion of the work is approximately $1,384,000 and the infrastructure improvement portion of the work is approximately $1,084,000 (2013 Dollars).

Option 7 – Stabilize 1A & 1B w/ Anchored Sheeting & Soldier Piles ($2,286,000): Along Fairview Terrace, this option involves installing tiebacks into the soil under the roadway and soldier piles and structural concrete infill on the downhill side of the existing wall to spread the load back to the existing wall. As added protection, the existing wall will be faced with a new structural concrete facing. Along upper Gate Street, this option involves installing anchored sheeting on the downhill side of the existing wall and filling the annular space between the sheeting and wall with dense-graded crushed stone. The sheeting will be anchored using tiebacks into the soil under the roadway and wales to spread the load to the sheeting. This hybrid option includes the cost to repair the existing distressed pavement, install a new sidewalk, lighting and guardrail, plus upgrade the existing 8" waterline, 8" sewer line and 12" storm drain line. The depth of the tiebacks may necessitate replacing the existing sewer line. The stabilization portion of the work is approximately $1,202,000 and the infrastructure improvement portion of the work is approximately $1,084,000 (2013 Dollars).

Option 8 – Total Reconstruction with New Concrete Retaining Wall ($2,861,000) This option involves removing the existing wall and constructing a new cantilevered structural concrete retaining wall. This option includes upgrading all municipal utilities within the roadway, as well as, replacing the existing distressed pavement plus adding lighting and a new bridge rail. This option results in maximum disruption to the existing roadway and potential construction coordination and homeowner access issues. The projected construction cost is in 2013 Dollars.

PERMANENT REPAIR OPTIONS (SEGMENT 2):

Our firm has compiled 3 options to permanently address stabilizing Segment 2. Costs for these options range from $512,000 to $646,000 in 2013 dollars. All 3 options maintain 2-way traffic on lower Gate Street. Two (2) of the options involve stabilizing the existing walls with either cantilevered sheeting or tiebacks. The last option includes complete replacement of the existing retaining walls with a new cantilevered reinforced concrete retaining wall. Soil nail walls and soil-reinforced MSE walls were not considered due to conflicts and restrictions related to utility infrastructure. All improved areas include new pavement, sidewalks, guard rails or bridge rails, waterlines, sewer lines, and storm drains. All options also include stabilization of Segment 3. Refer to **Appendix E** for sketch plans and sections along with projected construction costs.

Option 1 – Stabilize Segment 2 Wall with Cantilevered Steel Sheeting ($512,000): This option involves installing cantilevered sheeting on the downhill side of the existing wall and filling the annular space between the sheeting and wall with dense-graded crushed stone. This option includes the cost to repair the existing distressed pavement, install a new sidewalk, lighting and guardrail, plus upgrade the existing 8" waterline, 8" sewer line and 12" storm drain line. This option encroaches on the Church property by approximately 2 to 3 feet. Vibration from this option may add to the distress of the existing roadway. The stabilization portion of the work is approximately $125,000 and the infrastructure improvement portion of the work is approximately $387,000 (2013 Dollars).

Option 2 – Stabilize Segment 2 Wall w/ Tiebacks & New Concrete Face ($558,000): This option involves installing tiebacks into the soil behind the existing concrete wall and encapsulating the new tiebacks using a structural reinforced concrete face. This option includes the cost to repair the existing distressed pavement, install a new sidewalk, lighting and bridge rail, plus upgrade the existing 8" waterline, 8" sewer line and 12" storm drain line. This option encroaches on the Church property by approximately 1 foot. The stabilization portion of the work is approximately $171,000 and the infrastructure improvement portion of the work is approximately $387,000 (2013 Dollars).

Option 3 – Total Reconstruction with New Concrete Retaining Wall ($646,000): This option involves removing the existing wall and constructing a new cantilevered concrete retaining wall. This option includes upgrading all municipal utilities within the roadway, as well as, replacing the existing distressed pavement plus adding lighting and a new bridge rail. This option results in no permanent encroachment on the Church but results in maximum disruption to the existing roadway and potential construction coordination and homeowner access issues. The stabilization portion of the work is approximately $259,000 and the infrastructure improvement portion of the work is approximately $387,000 (2013 Dollars).

CONCLUSIONS, RECOMMENDATIONS & CAPITAL PLAN:

First, the Town needs to address the current unsafe condition where pedestrians are walking in the street with traffic because there are no sidewalks along Gate Street. This situation is particularly unsafe because of the steep and curvy alignment of this street combined with the fact that there is no escape route for the pedestrians or vehicles to avoid an accident. If the Town can provide another safe route for pedestrians, then the initial capital expenditure can be deferred 5 years. Our firm has identified at least 3 options for addressing the pedestrian issue on a temporary basis with combined Segment 1A, 1B & 2 costs ranging from $25,000 to $430,000. It should be noted that both Temporary Option T1 ($200,000) and Option T2 ($425,000) address the immediate stability concerns related to the Segment 1B stone wall so that the bulk of the capital expenditure can be extended from 5 years to 10 years.

Second, the Town needs to address the most critical wall section, which is the stone wall along the downhill side of upper Gate Street (Segment 1B). Short of closing this portion of Gate Street, the 8 permanent repair options identified in this report may be phased to address upper Gate Street within 5 years and Fairview Terrace within 10 years. Though some efficiency will be lost in the phasing of the work, the costly infrastructure improvements can be deferred until the Fairview Terrace portion of the work is scheduled to be done. Deferring the infrastructure improvements will reduce the cost of the initial Gate Street portion of the work by approximately 35% to 60%. These saving are reflected in Temporary Options T1 & T2.

Third, the Town needs to complete the stabilization of the next critical wall section, which is the concrete wall along the downhill side of Fairview Terrace (Segment 1A). Of the 7 options which maintain 2-way traffic on upper Gate Street, our firm would recommend either Option 2 or Option 3. In addition to being the 2 cheapest (2-lane) options, they are simplistic in nature and require minimal structural retaining mechanisms. This simplicity results in the greatest longevity for the finished roadway since structural deterioration less of a factor. The lack of defined structure along the edge of the roadway also allows for greater flexibility in future modifications to the roadway. Option 1, though 5% to 9% cheaper than Options 1 & 2, will result in a significant change to the traffic flow on this part of the village which is probably not warranted for such a small savings. The primary disadvantages to Options 1 through 4 are that they maximize the aesthetic impact on the existing mature wooded area below Fairview Terrace and the amount of land acquisition required to construct the project.

Fourth, the Town needs to complete the stabilization of the final wall section, which is the concrete wall along the downhill side of lower Gate Street (Segment 2). Of the 3 options, our firm would recommend either Option 2. In addition to being only slightly more expensive than Option 1, the finished construction will likely be more aesthetically pleasing and should encroach only slightly on the adjacent church property.

In summary, our firm recommends constructing Temporary Option T2 for Segment 1B, then constructing permanent Option 2 or Option 3 for Segments 1A & 1B and permanent Option 2 for Segment 2. This approach will result in the following Capital Plan:

- Include $5,000 in the 2014 budget to install two 6,000# weight limit signs on upper Gate Street (Segment 1B), and, if spacing allows, to create a temporary pedestrian path by installing a guard rail along lower Gate Street (Segment 2) to accommodate pedestrian traffic to and from Maplewood Terrace. For 2014, the Town has provided an alternate pedestrian path in lieu of using Upper Gate Street (Segment 1B).

- Include $430,000 in the 2015 budget to provide for Phase 1 stabilization of Segment 1B and provide safer pedestrian traffic for upper Gate Street.

- Raise $3,430,000 by 2024 to provide Phase 2 (permanent) stabilization of Segments 1A, 1B, 2, 3 & 4 and the associated infrastructure improvements. This budget amount is based upon a 5% inflation rate and the projected costs of the Option 2 repairs for all segments and reduced by the $415,000 value of the initial work performed in 2015.

APPENDIX A

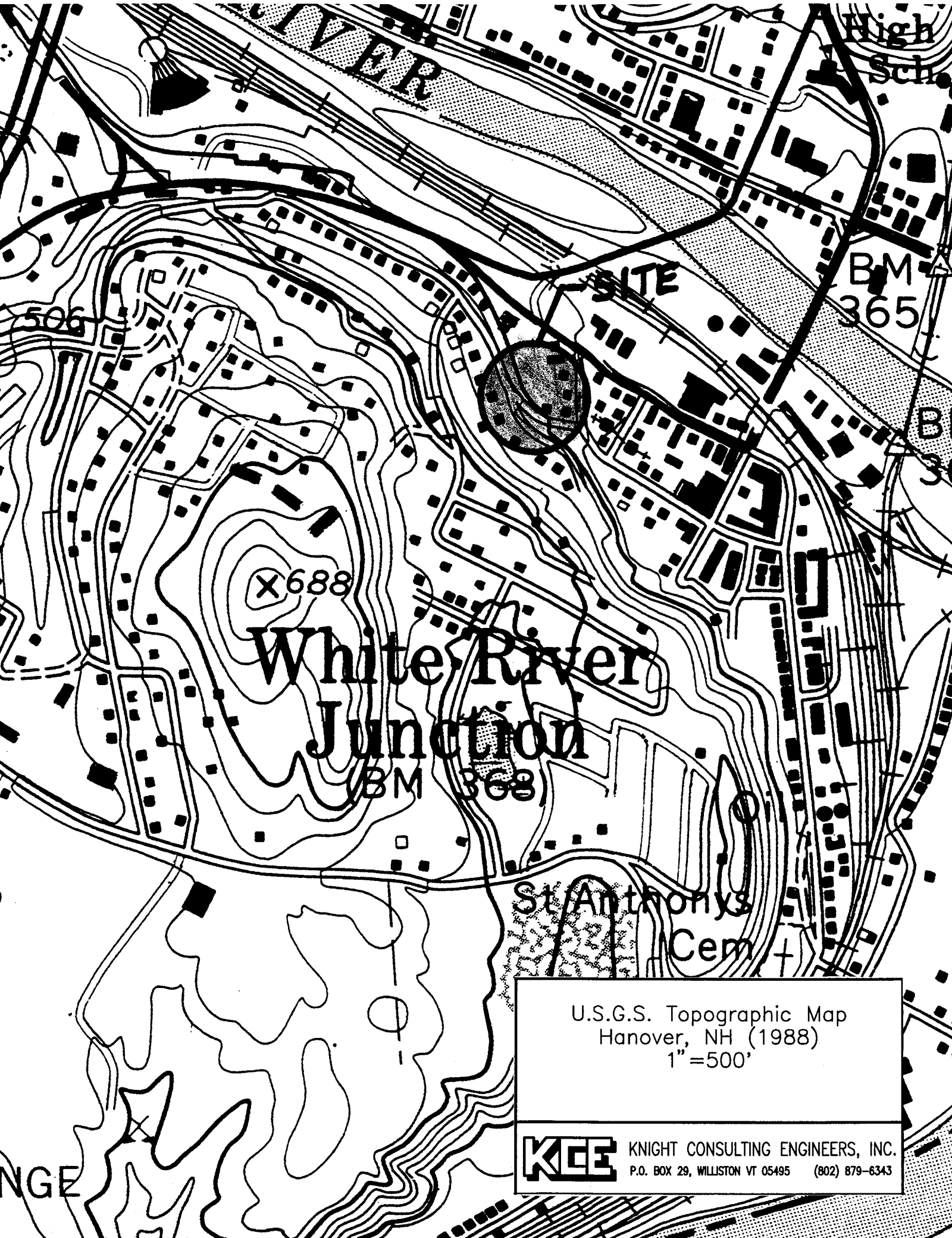

U.S.G.S. Topographic Map
Hanover, NH (1988)
1"=500'

KCE KNIGHT CONSULTING ENGINEERS, INC.
P.O. BOX 29, WILLISTON VT 05495 (802) 879-6343

APPENDIX B

MIKE'S BORING & CORING LLC.
PO Box 75 ° East Barre, Vermont 05649 ° 802 476-5073

TO: Eric Goddard Knight Consulting Engineers, Inc. 51 Knight Lane Williston, VT 05495	PROJECT NAME: Retaining Wall LOCATION: Hartford, VT MBC JOB #: 13026	SHEET: 1 DATE: 4-11 -13 HOLE #: B-1 LINE & STA. OFFSET:

Ground Water Observations 28.5' Est. at 0 hours	Augers-Size I.D. 2 5/8 Split Spoon 2" Hammer Wt. 140# Hammer Fall 30"	Surface Elevation: 433.3' +/- Date Started: 4-11 -13 Date Completed: 4-11 -13 Boring Foreman: Dave Johnson Inspector: Eric Goddard Soils Engineer: Eric Goddard

LOCATION OF BORING: As shown

Sample Depths From/To (Feet)	Type of Sample	Blows per 6" on Sampler	Moisture Density or Consist.	Strata Change Elev.	Soil Identification	Sample No.	Pen. Inches	Rec. Inches
6"-2'6"	Dry	10/8/7/9	Damp		Dense brown cmf sand, some f gravel	1	24	14
5'-7'	Dry	2/2/2/3	Damp		Loose brown cmf sand, trace f gravel	2	24	14
10'-12'	Dry	4/4/4/5	Damp		Loose-to-medium dense brown cmf sand, trace f gravel	3	24	16
15'-17'	Dry	4/4/4/6	Damp		Loose-to-medium dense brown f sand	4	24	23
20'-22'	Dry	6/10/10/12	Moist		Medium dense brown cmf sand	5	24	24
25'-27'	Dry	7/8/5/7	Moist		Medium dense brown cmf sand	6	24	24
30'-32'	Dry	5/5/7/8	Wet		Medium dense brown cmf sand	7	24	20

Ground Surface to 30'

Used 2 5/8 augers:

Then S.S. to 32'

Earth Borings	32'
Rock Coring	
Samples:	7
HOLE NUMBER	B-1

MIKE'S BORING & CORING LLC.
PO Box 75 ° East Barre, Vermont 05649 ° 802 476-5073

TO: Eric Goddard Knight Consulting Engineers, Inc. 51 Knight Lane Williston, VT 05495	PROJECT NAME: Retaining Wall LOCATION: Hartford, VT MBC JOB #: 13026	SHEET: 2 DATE: 4-12 -13 HOLE #: B-1A LINE & STA. OFFSET:

Ground Water Observations None at 0 hours	Augers-Size I.D. Hand held drill Split Spoon 1.3" O.D. Hammer Wt. 35# Hammer Fall 24"	Surface Elevation: 420.75' +/- Date Started: 4-12 -13 Date Completed: 4-12 -13 Boring Foreman: Mike McGinley Inspector: Eric Goddard Soils Engineer: Eric Goddard

LOCATION OF BORING: **(Reduce SPT values by 55% to 60%)**

Sample Depths From/To (Feet)	Type of Sample	Blows per 6" on Sampler	Moisture Density or Consist.	Strata Change Elev.	Soil Identification	Sample No.	Pen. Inches	Rec. Inches
0'-3.5'	Dry	3/2/4/6/7/8/11	Damp		Loose brown/gray weathered rock and silty sand	1	42	12
3.5'-7'	Dry	5/5/5/11/10/4/6	Damp/ Moist		Loose brown/gray weathered rock and silty sand into brown medium fine sand	2	42	12
7'-10'	Dry	7/4/4/7/5/7	Moist		Loose brown medium fine sand	3	36	17
10'-13'	Dry	5/6/12/18/17/16	Moist	11.5'	Loose brown medium fine sand into medium dense brown fine sand	4	36	12

Ground Surface to 10'

Used hand held drill: Then S.S. to 13'

Earth Borings	13'
Rock Coring	
Samples:	4
HOLE NUMBER	B-1A

MIKE'S BORING & CORING LLC.
PO Box 75 ° East Barre, Vermont 05649 ° 802 476-5073

TO: Eric Goddard Knight Consulting Engineers, Inc. 51 Knight Lane Williston, VT 05495	PROJECT NAME: Retaining Wall LOCATION: Hartford, VT MBC JOB #: 13026	SHEET: 3 DATE: 4-11 -13 HOLE #: B-2 LINE & STA. OFFSET:

Ground Water Observations None at 0 hours	Augers-Size I.D. 2 5/8 Split Spoon 2" Hammer Wt. 140# Hammer Fall 30"	Surface Elevation: 433.0' +/- Date Started: 4-11 -13 Date Completed: 4-11 -13 Boring Foreman: Dave Johnson Inspector: Eric Goddard Soils Engineer: Eric Goddard

LOCATION OF BORING: As shown

Sample Depths From/To (Feet)	Type of Sample	Blows per 6" on Sampler	Moisture Density or Consist.	Strata Change Elev.	Soil Identification	Sample No.	Pen. Inches	Rec. Inches
4"-2'4"	Dry	8/6/3/3	Moist		4" pavement into medium dense brown mf sand, f gravel	1	24	4
5'-7'	Dry	6/4/3/3	Moist		Loose-to-medium dense brown cmf sand	2	24	12
10'-12'	Dry	6/5/5/5	Moist	10.5'	Medium dense brown cmf sand into medium dense brown vf sand, some silt	3	24	24
15'-17'	Dry	6/6/5/8	Moist	16' 16'8"	Medium dense brown vf sand, some silt into medium dense brown cmf sand into medium dense brown fine sand	4	24	24
20'-22'	Dry	9/9/9/10	Moist		Medium dense brown f sand, trace f gravel	5	24	24
25'-27'	Dry	11/12/17/28	Moist		Medium dense-to-dense brown f sand, trace f gravel	6	24	24
30'-32'	Dry	12/11/14/18	Moist		Medium dense-to-dense brown cmf sand	7	24	24

Ground Surface to 30' Used 2 5/8 augers: Then S.S. to 32'

Earth Borings	32'
Rock Coring	
Samples:	7
HOLE NUMBER	B-2

MIKE'S BORING & CORING LLC.
PO Box 75 ° East Barre, Vermont 05649 ° 802 476-5073

TO: Eric Goddard Knight Consulting Engineers, Inc. 51 Knight Lane Williston, VT 05495	PROJECT NAME: Retaining Wall LOCATION: Hartford, VT MBC JOB #: 13026	SHEET: 4 DATE: 4-12 -13 HOLE #: B-2A LINE & STA. OFFSET: 3.5'SW

Ground Water Observations None at 0 hours	Augers-Size I.D. Split Spoon Hammer Wt. Hammer Fall	Hand held drill 1.3" O.D. 35# 24"	Surface Elevation: Date Started: Date Completed: Boring Foreman: Inspector: Soils Engineer:	412.0' +/- 4-12 -13 4-12 -13 Mike McGinley Eric Goddard Eric Goddard

LOCATION OF BORING: **(Reduce SPT values by 55% to 60%)**

Sample Depths From/To (Feet)	Type of Sample	Blows per 6" on Sampler	Moisture Density or Consist.	Strata Change Elev.	Soil Identification	Sample No.	Pen. Inches	Rec. Inches
0'-4.5'	Dry	0/0/2/2/2/4/3/5/6			Very loose-to-loose brown vf sand, some silt	1	54	8
4.5'-7.5'	Dry	30/9/7/6/6/7			Loose brown vf sand, some silt	2	36	24
7.5'-10.5'	Dry	8/10/14/14/15/14			Loose-to-medium dense gray cmf sand	3	36	

Ground Surface to 7.5'

Used hand held drill: Then S.S. to 10.5'

Earth Borings	10.5'
Rock Coring	
Samples:	3
HOLE NUMBER	B-2A

MIKE'S BORING & CORING LLC.
PO Box 75 ° East Barre, Vermont 05649 ° 802 476-5073

TO: Eric Goddard Knight Consulting Engineers, Inc. 51 Knight Lane Williston, VT 05495	PROJECT NAME: Retaining Wall LOCATION: Hartford, VT MBC JOB #: 13026	SHEET: 5 DATE: 4-11 -13 HOLE #: B-3 LINE & STA. OFFSET:

Ground Water Observations None at _0 _ hours	Augers-Size I.D. 2 5/8 Split Spoon 2" Hammer Wt. 140# Hammer Fall 30"	Surface Elevation: 402.2' +/- Date Started: 4-11 -13 Date Completed: 4-11 -13 Boring Foreman: Dave Johnson Inspector: Eric Goddard Soils Engineer: Eric Goddard

LOCATION OF BORING: As shown

Sample Depths From/To (Feet)	Type of Sample	Blows per 6" on Sampler	Moisture Density or Consist.	Strata Change Elev.	Soil Identification	Sample No.	Pen. Inches	Rec. Inches
8"-2'8"	Dry	10/10/10/6	Dry	1'-8"	8" pavement into dense brown mf sand & mf gravel into medium dense brown f sand, some silt & f gravel	1	24	16
4'-6'	Dry	5/7/8/5	Damp		Medium dense brown f sand, some silt & f gravel	2	24	6
9'-11'	Dry	5/6/8/10	Damp/dry /moist	9.5' 10.5'	Medium dense brown f sand, some silt & f gravel into medium dense brown cmf sand into medium dense brown f sand	3	24	20
14'-16'	Dry	12/12/14/12	Dry		Medium dense-to-dense brown cmf sand, some f gravel	4	24	18
19'-21'	Dry	10/11/16/15	Dry		Medium dense-to-dense brown cmf sand, some f gravel	5	24	20

Ground Surface to 19' Used 2 5/8 augers: Then S.S. to 21'

Earth Borings	21'
Rock Coring	
Samples:	5
HOLE NUMBER	B-3

MIKE'S BORING & CORING LLC.
PO Box 75 ° East Barre, Vermont 05649 ° 802 476-5073

TO: Eric Goddard Knight Consulting Engineers, Inc. 51 Knight Lane Williston, VT 05495	PROJECT NAME: Retaining Wall LOCATION: Hartford, VT MBC JOB #: 13026	SHEET: 6 DATE: 4-11 -13 HOLE #: B-3A LINE & STA. OFFSET:

Ground Water Observations None at 0 hours	Augers-Size I.D. 2 5/8 Split Spoon 2" Hammer Wt. 140# Hammer Fall 30"	Surface Elevation: 386.8' +/- Date Started: 4-11 -13 Date Completed: 4-11 -13 Boring Foreman: Dave Johnson Inspector: Eric Goddard Soils Engineer: Eric Goddard

LOCATION OF BORING: As shown

Sample Depths From/To (Feet)	Type of Sample	Blows per 6" on Sampler	Moisture Density or Consist.	Strata Change Elev.	Soil Identification	Sample No.	Pen. Inches	Rec. Inches
0'-2'	Dry	3/3/3/5	Damp		Medium dense brown fine sand, some silt & f gravel	1	24	6
5'-7'	Dry	11/16/28/30	Moist		Dense-to-very dense brown mf sand & mf gravel	2	24	14
10'-12'	Dry	10/10/10/10	Moist		Medium dense brown cmf sand & cmf gravel	3	24	16

Ground Surface to 10' Used 2 5/8 augers: Then S.S. to 12'

Earth Borings 12'
Rock Coring
Samples: 3
HOLE NUMBER B-3A

MIKE'S BORING & CORING LLC.
PO Box 75 ° East Barre, Vermont 05649 ° 802 476-5073

TO: Eric Goddard Knight Consulting Engineers, Inc. 51 Knight Lane Williston, VT 05495	PROJECT NAME: Retaining Wall LOCATION: Hartford, VT MBC JOB #: 13026	SHEET: 7 DATE: 4-11 -13 HOLE #: B-3B LINE & STA. OFFSET:

Ground Water Observations None at 0 hours	Augers-Size I.D. 2 5/8 Split Spoon 2" Hammer Wt. 140# Hammer Fall 30"	Surface Elevation: 434.45' +/- Date Started: 4-11 -13 Date Completed: 4-11 -13 Boring Foreman: Dave Johnson Inspector: Eric Goddard Soils Engineer: Eric Goddard

LOCATION OF BORING: As shown

Sample Depths From/To (Feet)	Type of Sample	Blows per 6" on Sampler	Moisture Density or Consist.	Strata Change Elev.	Soil Identification	Sample No.	Pen. Inches	Rec. Inches
0'-2'	Dry	6/3/2/2	Moist		Loose-to-medium dense brown/gray f sand, some silt	1	24	14
5'-7'	Dry	5/5/6/7	Wet	6'	Medium dense brown fine sand into medium dense brown cmf sand	2	24	18
10'-12'	Dry	3/5/6/7	Wet		Medium dense brown cmf sand into medium dense gray silt, some vf sand	3	24	24
15'-17'	Dry	9/11/10/11	Moist		Medium dense gray vf sand & silt	4	24	20
20'-22'	Dry	11/14/17/28	Moist		Dense gray/brown vf sand & silt	5	24	24
25'-27'	Dry	11/12/13/13	Moist		Medium dense gray/brown vf sand with layers of gray silt, trace f gravel	6	24	20
30'-32'	Dry	13/14/19/24	Moist		Medium dense-to-dense gray/brown silt with layers of brown vf sand	7	24	24

Ground Surface to 32' Used 2 5/8 augers: Then S.S. to 32'

Earth Borings	32'
Rock Coring	
Samples:	7
HOLE NUMBER	B-3B

MIKE'S BORING & CORING LLC.
PO Box 75 ° East Barre, Vermont 05649 ° 802 476-5073

TO: Eric Goddard Knight Consulting Engineers, Inc. 51 Knight Lane Williston, VT 05495	PROJECT NAME: Retaining Wall LOCATION: Hartford, VT MBC JOB #: 13026	SHEET: 8 DATE: 4-11 -13 HOLE #: B-4 LINE & STA. OFFSET:

Ground Water Observations none at 0 hours	Augers-Size I.D. 2 5/8 Split Spoon 2" Hammer Wt. 140# Hammer Fall 30"	Surface Elevation: 375.9' +/- Date Started: 4-11 -13 Date Completed: 4-11 -13 Boring Foreman: Dave Johnson Inspector: Eric Goddard Soils Engineer: Eric Goddard

LOCATION OF BORING: As shown

Sample Depths From/To (Feet)	Type of Sample	Blows per 6" on Sampler	Moisture Density or Consist.	Strata Change Elev.	Soil Identification	Sample No.	Pen. Inches	Rec. Inches
0.5'-2.5'	Dry	30/28/12/11	Damp		6" pavement into very dense-to-dense brown cmf sand, some mf gravel	1	24	18
4'-6'	Dry	6/4/6/5	Moist		Medium dense brown mf sand, some f gravel	2	24	12
9'-11'	Dry	6/6/6/8	Moist		Medium dense brown cmf sand	3	24	18
14'-16'	Dry	5/7/9/11	Moist		Medium dense brown mf sand	4	24	22

Ground Surface to 14'

Used 2 5/8 augers:

Then S.S. to 16'

Earth Borings	16'
Rock Coring	
Samples:	4
HOLE NUMBER	B-4

MIKE'S BORING & CORING LLC.
PO Box 75 ° East Barre, Vermont 05649 ° 802 476-5073

TO: Eric Goddard Knight Consulting Engineers, Inc. 51 Knight Lane Williston, VT 05495	PROJECT NAME: Retaining Wall LOCATION: Hartford, VT MBC JOB #: 13026	SHEET: 9 DATE: 4-12 -13 HOLE #: B-4B LINE & STA. OFFSET:

Ground Water Observations None at 0 hours	Augers-Size I.D. Hand held drill Split Spoon 1.3" O.D. Hammer Wt. 35# Hammer Fall 24"	Surface Elevation: 383.5' +/- Date Started: 4-12 -13 Date Completed: 4-12 -13 Boring Foreman: Mike McGinley Inspector: Eric Goddard Soils Engineer: Eric Goddard

LOCATION OF BORING: **(Reduce SPT values by 55% to 60%)**

Sample Depths From/To (Feet)	Type of Sample	Blows per 6" on Sampler	Moisture Density or Consist.	Strata Change Elev.	Soil Identification	Sample No.	Pen. Inches	Rec. Inches
0'-3.5'	Dry	2/4/30/33/12/10/8	Moist		Medium dense-to-dense brown f sand, some silt & f gravel	1	42	12
3.5'-7'	Dry	8/10/10/8/8/13/13	Moist		Loose-to-medium dense brown f sand, some silt & f gravel	2	42	1
7'-10'	Dry	5/21/20/21/50 for 3"	Moist		Medium dense brown f sand, some silt & f gravel	3	27	14

Ground Surface to 7' Used hand held drill: Then S.S. to 10'

Earth Borings	10'
Rock Coring	
Samples:	3
HOLE NUMBER	B-4B

APPENDIX C

SEGMENT 1B PROJECTED CONSTRUCTION COST OPTIONS (08/30/2013)

SCOPE ITEM	PROJECTED COST	SEGMENT 1B (UPPER GATE STREET) TEMPORARY OPTION DESCRIPTION
Option T0	$19,878	Close upper Gate Street to vehicular traffic and use it soley for pedestrian traffic. This option involves pacing Jersey barriers at both ends and a chain-link fence along the toe of slope below the stone wall to keep people away from the risk of falling stones.
Option T1	$201,188	Reduce upper Gate Street to alternating 1-way vehicular traffic using traffic signals at each end. This option would allow safer pedestrian traffic by installation of a temporary guardrail between the vehicular & pedestrian portions of the existing pavement. Fall protection would be provided by a chain link fence along the top of the wall. Stability of the stone wall would be improved by removing the upper concrete cap and sloping back the soil to meet the edge of the pedestian sidewalk. This option could be Phase 1 of permanent Option 1.
Option T2	$425,313	Stabilize upper Gate Street using sloping stone fill with Redi-Rock block at the toe of the slope in the vicinity of the existing house in order to keep it in its current location. This option would allow for 2-way vehicular traffic and safer pedestrian traffic by installation of a temporary guardrail between the existing vehicular pavement and the new temporary pedestrian paved sidewalk. Fall protection would be provided by a chain-link fence along the top of the Redi-Rock wall. This option could be Phase 1 of permanent Option 3.

Note T0: Approximately all $19,878 of this work would not be used in any permanent future options.

Note T1: Approximately $20,000 to $110,000 of this work would not be used in future Option 1.

Note T2: Approximately $10,000 of this work would not be used in future Option 3.

SEGMENT 1B PROJECTED CONSTRUCTION COST (OPTION T0)
CLOSE UPPER GATE STREET

ITEM	QUANTITY	UNIT	UNIT PRICE	AMOUNT	COMMENTS
General Mobilization	1	LS	$1,500.00	$1,500.00	
Temporary Jersey Barriers	100	LF	$61.50	$6,150.00	
Temporary 6' Chain-link Fence	315	LF	$15.72	$4,951.80	
Traffic Control	1.00	Day	$650.00	$650.00	1 Day
Sub-total				**$13,251.80**	
10% Overhead & Profit				**$1,325.18**	
15% Engineering & Testing				**$1,987.77**	
25% Contingency				**$3,312.95**	
Total				**$19,877.70**	**2013 Dollars**

Segment 1

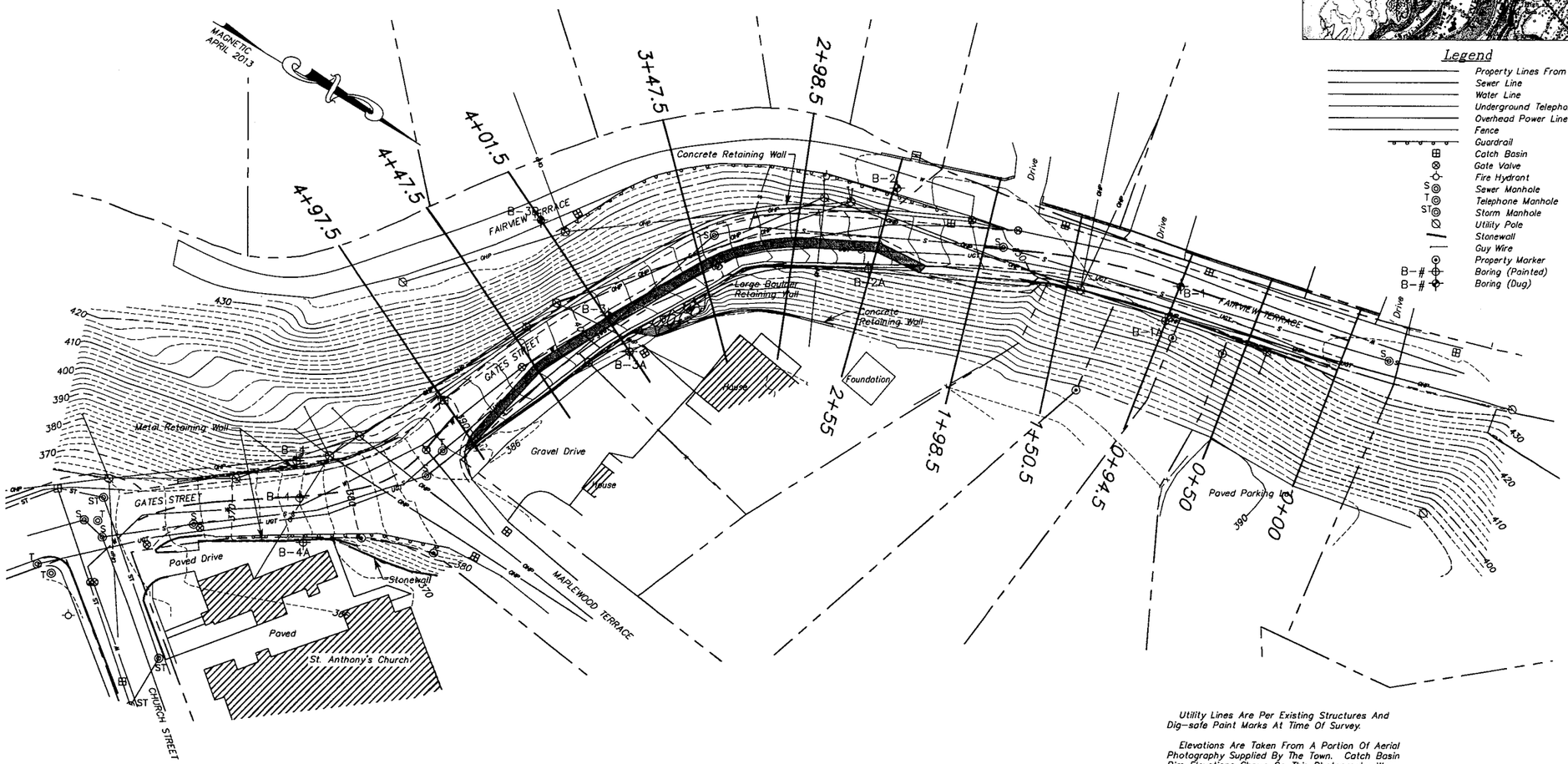

Location Map

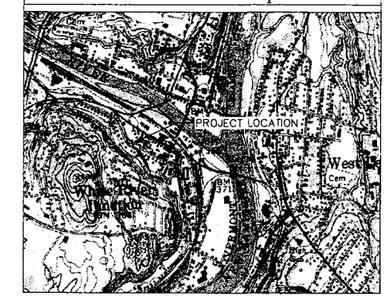

Legend

- Property Lines From GIS Info.
- Sewer Line
- Water Line
- Underground Telephone Line
- Overhead Power Line
- Fence
- Guardrail
- Catch Basin
- Gate Valve
- Fire Hydrant
- Sewer Manhole
- Telephone Manhole
- Storm Manhole
- Utility Pole
- Stonewall
- Guy Wire
- Property Marker
- B-# Boring (Painted)
- B-# Boring (Dug)

Utility Lines Are Per Existing Structures And Dig-safe Paint Marks At Time Of Survey.

Elevations Are Taken From A Portion Of Aerial Photography Supplied By The Town. Catch Basin Rim Elevations Shown On This Photography Was Used As A Basis For Elevations On This Plan By Averaging.

Property lines are approximate as taken from Vermont GIS data and fit to the features.

This field survey was completed on 4/11/13 using a Topcon Total Station.

Reference plan: "Sidewalk Layout Plan For Town Of Hartford – Church Street Sidewalk" by Pathways Consulting, LLC, dated 8/13/10.

GRAPHIC SCALE

40 0 20 40 80 160

(IN FEET)
1 inch = 40 ft.

Option T1 – One Lane (Upper Gate)

SURVEY LDY/BEG	SUMMIT ENGINEERING, INC Engineers • Surveyors • Planners • Landscape Architects 1233 Shelburne Road C2 South Burlington, VT 05403 (802) 658-3588	TOPOGRAPHIC SURVEY	DATE 4/26/13
DESIGNED		TOWN OF HARTFORD GATES STREET WHITE RIVER JCT., VT	DRAWING NO. B1
DRAWN BEG			PROJECT NO. 8251
CHECKED LDY			
SCALE 1"=40'			©

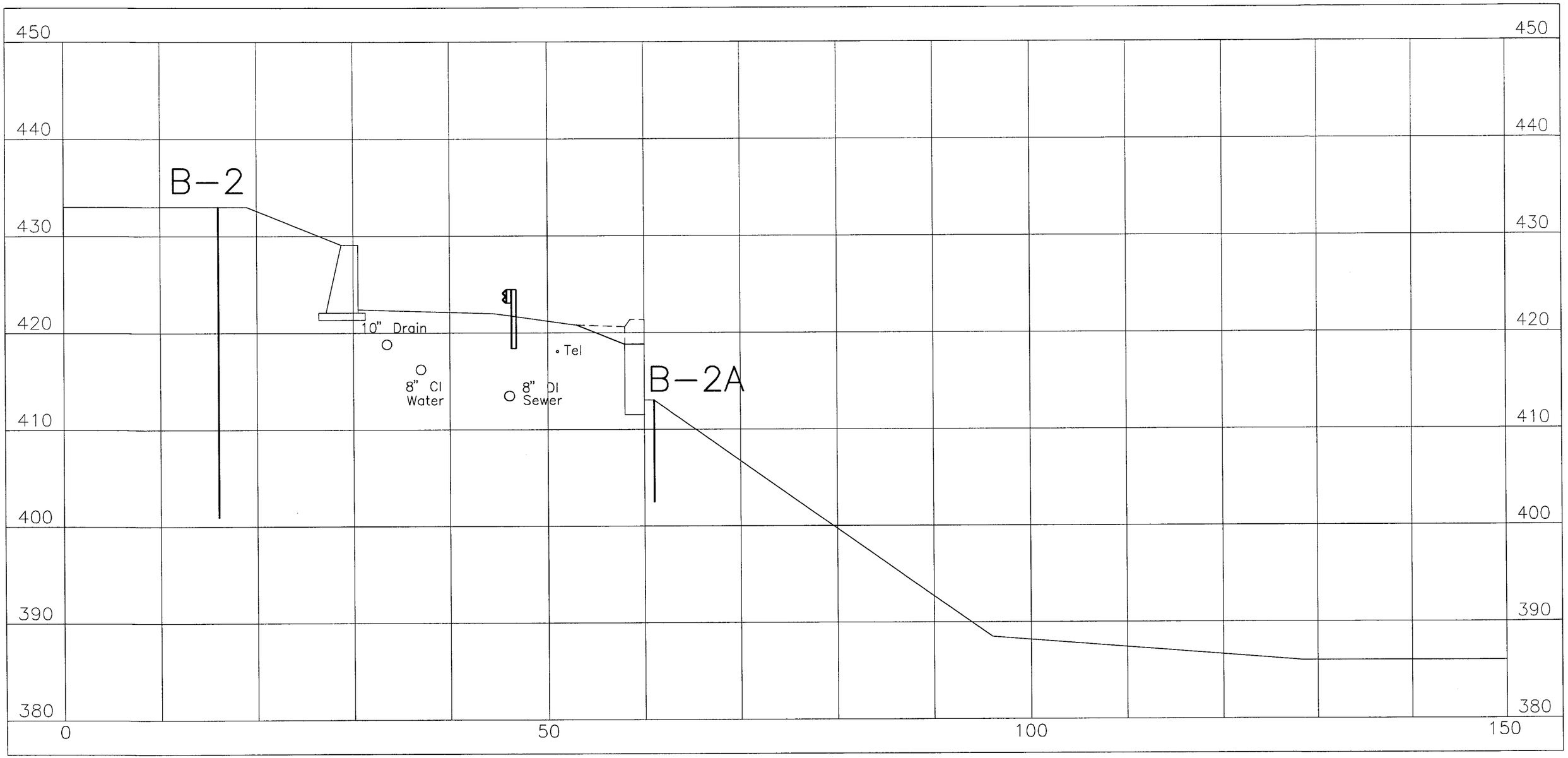

SECTION 2+55 (Option T1 – Narrow Upper Gate)

SCALE: 1" = 10' HOR.
1" = 10' VERT.

SEGMENT 1B PROJECTED CONSTRUCTION COST (OPTION T1)
NARROW UPPER GATE STREET TO 1-LANE PLUS ADD TEMPORARY GUARD RAIL, FENCE & SIGNALS

ITEM	QUANTITY	UNIT	UNIT PRICE	AMOUNT	COMMENTS
General Mobilization	1	LS	$5,000.00	$5,000.00	
Silt Fence	315	LF	$3.08	$970.20	
Clear & Grub (19,010 SF)	0.000	AC	$12,270.64	$0.00	
6"x2,700 SF Remove Pavement	50	CY	$15.97	$798.50	
Slope Excavation	118	CY	$12.64	$1,491.52	In-place CY
Concrete Demolition	57.67	CY	$289.32	$16,685.08	In-place CY
Haul	294	LCY	$9.00	$2,646.00	Loose CY (30% Fluff Factor)
New Topsoil (1,930 SF)	36	CY	$27.40	$986.40	
Restoration (1,930 SF)	215	SY	$5.00	$1,075.00	
Jute Matting (1,930 SF)	215	SY	$2.54	$546.10	
Remove Existing Railing	273	LF	$7.59	$2,072.07	
Temporary Guard Rail	280	LF	$15.94	$4,463.20	
Temporary 6' Chain-link Fence	273	LF	$15.72	$4,291.56	
Temporary Traffic Signals	2	EA	$30,000.00	$60,000.00	
Temporary Signal Conduit	350	LF	$16.00	$5,600.00	
Easements & Legal	1	LS	$0.00	$0.00	
Resident Inspection	22.00	Days	$600.00	$13,200.00	1 Month
Traffic Control	22.00	Days	$650.00	$14,300.00	1 Month
Sub-total				**$134,125.63**	
10% Overhead & Profit				**$13,412.56**	
15% Engineering & Testing				**$20,118.85**	
25% Contingency				**$33,531.41**	
Total				**$201,188.45**	**2013 Dollars**

Segment 1 – Upper Gate Street

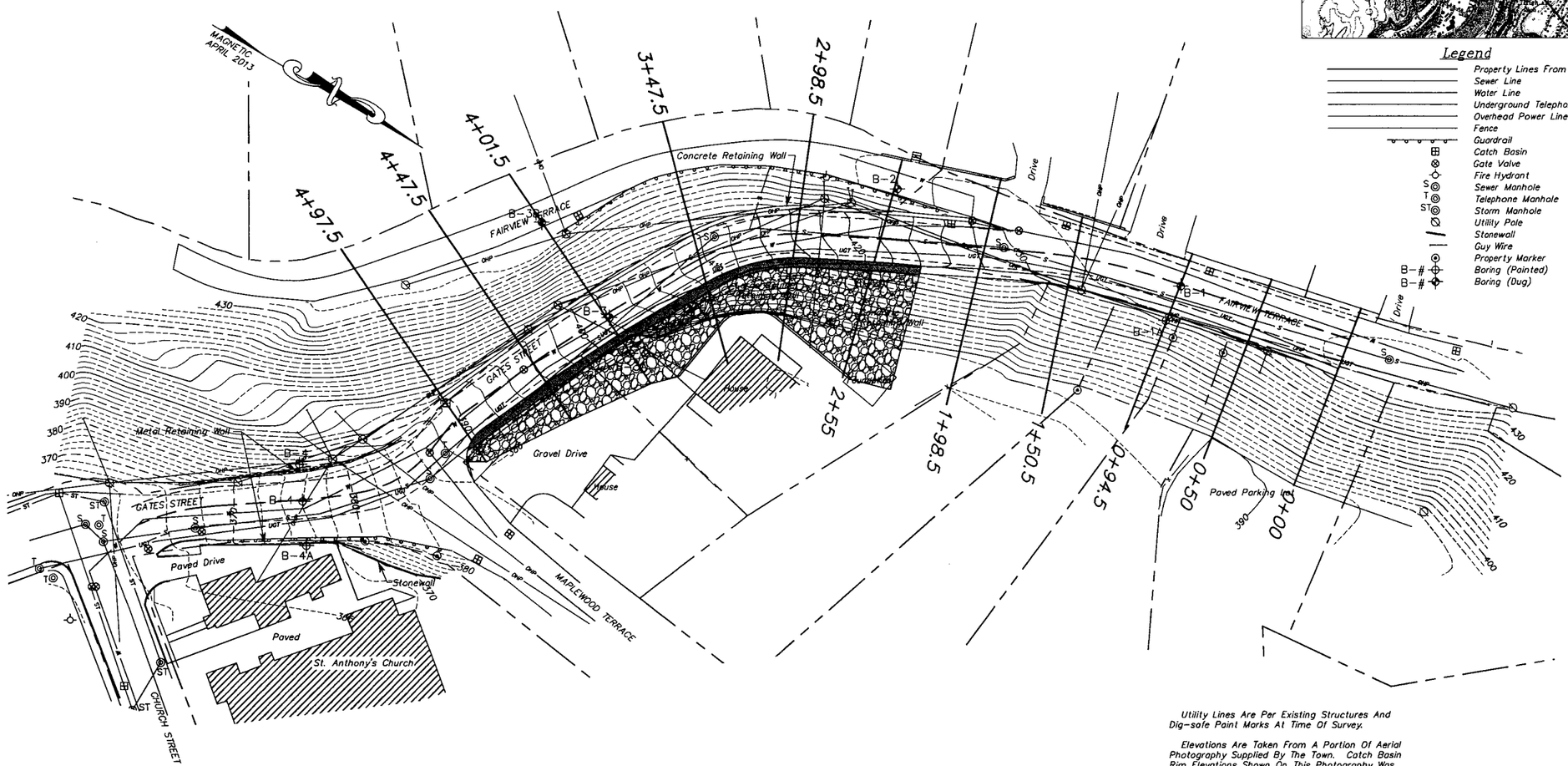

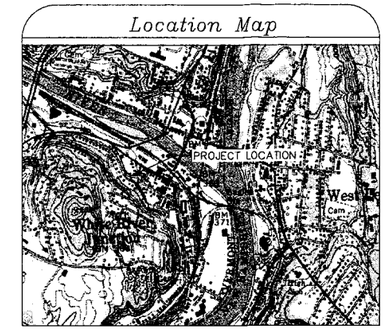

Legend

- Property Lines From GIS Info.
- Sewer Line
- Water Line
- Underground Telephone Line
- Overhead Power Line
- Fence
- Guardrail
- Catch Basin
- Gate Valve
- Fire Hydrant
- Sewer Manhole
- Telephone Manhole
- Storm Manhole
- Utility Pole
- Stonewall
- Guy Wire
- Property Marker
- B-# Boring (Painted)
- B-# Boring (Dug)

Utility Lines Are Per Existing Structures And Dig-safe Paint Marks At Time Of Survey.

Elevations Are Taken From A Portion Of Aerial Photography Supplied By The Town. Catch Basin Rim Elevations Shown On This Photography Was Used As A Basis For Elevations On This Plan By Averaging.

Property lines are approximate as taken from Vermont GIS data and fit to the features.

This field survey was completed on 4/11/13 using a Topcon Total Station.

Reference plan: "Sidewalk Layout Plan For Town Of Hartford – Church Street Sidewalk" by Pathways Consulting, LLC, dated 8/13/10.

GRAPHIC SCALE

40 0 20 40 80 160

(IN FEET)
1 inch = 40 ft.

Option T2 – 1.5:1 Stone Fill

SURVEY LDY/BEG	SUMMIT ENGINEERING, INC Engineers • Surveyors • Planners • Landscape Architects 1233 Shelburne Road C2 South Burlington, VT 05403 (802) 658-5588	TOPOGRAPHIC SURVEY	DATE 4/26/13
DESIGNED		TOWN OF HARTFORD GATES STREET WHITE RIVER JCT., VT	DRAWING NO. B1
DRAWN BEG			PROJECT NO. 8251
CHECKED LDY			
SCALE 1"=40'			

©

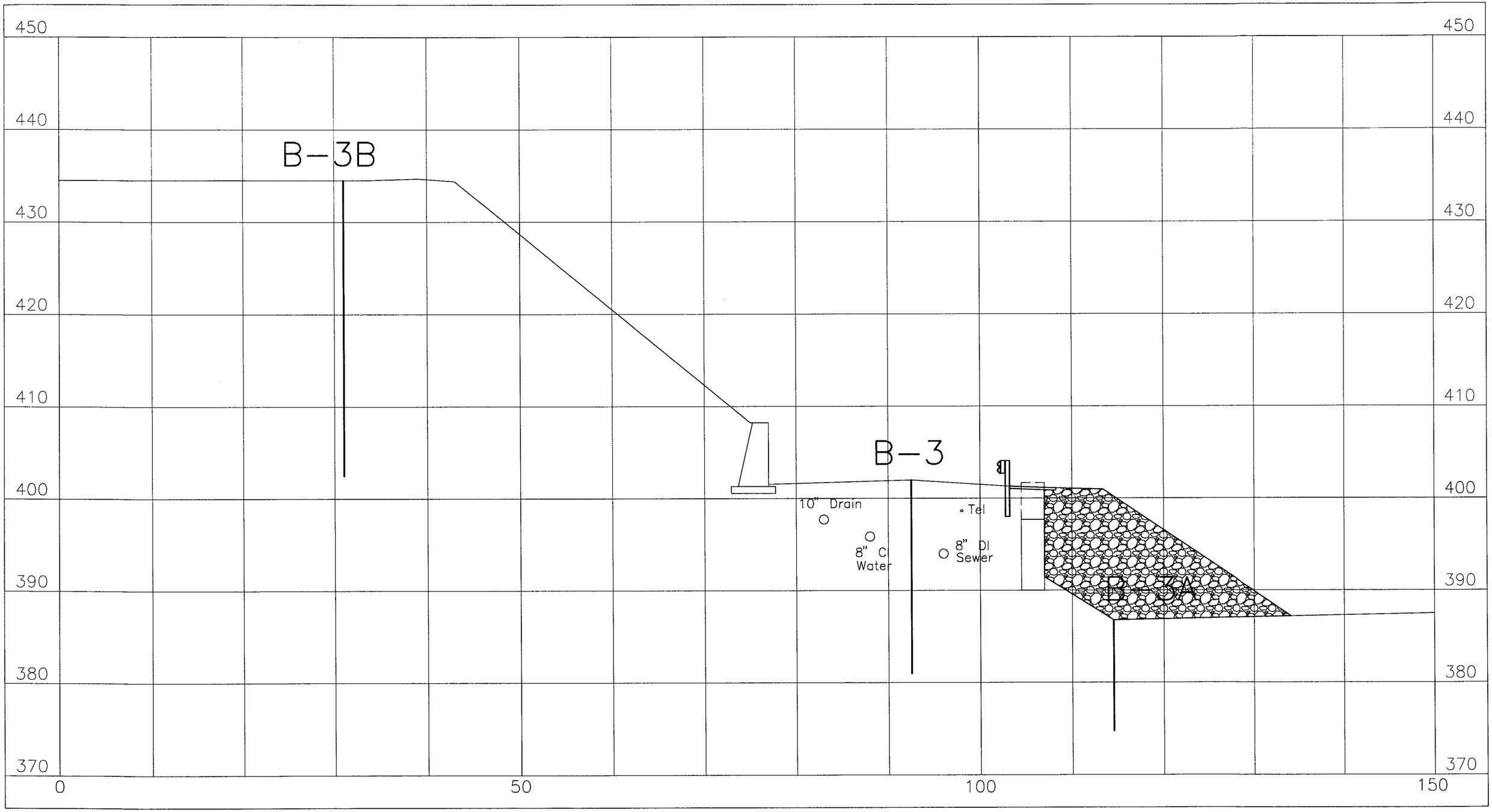

SECTION 4+01.50 (Option T2 – 1.5:1 Stone Fill)

SCALE: 1" = 10' HOR.
1" = 10' VERT.

SEGMENT 1B PROJECTED CONSTRUCTION COST (OPTION T2)
STABILIZE UPPER GATE STREET STONE WALL WITH SLOPING STONE FILL PLUS ADD TEMPORARY SIDEWALK & GUARD RAI

ITEM	QUANTITY	UNIT	UNIT PRICE	AMOUNT	COMMENTS
General Mobilization	1	LS	$10,000.00	$10,000.00	
Silt Fence	320	LF	$3.08	$985.60	
Clear & Grub (3,435 SF)	0.080	AC	$12,270.64	$981.65	
Strip Topsoil (7,705 SF)	143	CY	$7.09	$1,013.87	In-place CY
Remove Pavement (1166 SF)	11	CY	$15.97	$175.67	In-place CY
2'x4'x130' Concrete Demolition	38.50	CY	$289.32	$11,138.82	In-place CY
Haul	250	LCY	$9.00	$2,250.00	Loose CY (30% Fluff Factor)
Fine Crushed Gravel (136.95 CY)	250	Tons	$24.13	$6,032.50	In-place CY
Dense Graded Crushed Stone	3,038	CY	$33.00	$100,254.00	In-place CY
New Topsoil (7,705 SF)	143	CY	$27.40	$3,918.20	In-place CY
Restoration (7,705 SF)	856	SY	$5.00	$4,280.00	
Jute Matting (7,705 SF)	856	SY	$2.54	$2,174.24	
Redi-Rock Wall	1,158.00	SF	$35.00	$40,530.00	In lieu of sheeting
New 6' Chain-link Fence	124	LF	$15.72	$1,949.28	
Remove Existing Railing	267	LF	$7.59	$2,026.53	
Temporary Guard Rail	267	LF	$15.94	$4,255.98	
3" Temp. Sidewalk Pavement (1,335 SF)	25.03	Tons	$79.40	$1,987.38	
Easements & Legal	1	LS	$34,588.00	$34,588.00	Maximum
Resident Inspection	44.00	Days	$600.00	$26,400.00	2 Months
Traffic Control	44.00	Days	$650.00	$28,600.00	2 Months
Sub-total				**$283,541.72**	
10% Overhead & Profit				**$28,354.17**	
15% Engineering & Testing				**$42,531.26**	
25% Contingency				**$70,885.43**	
Total				**$425,312.58**	**2013 Dollars**

APPENDIX D

SEGMENT 1 PROJECTED CONSTRUCTION COST OPTIONS (08/30/2013)

SCOPE ITEM	PROJECTED COST	SEGMENT 1 OPTION DESCRIPTION
Option 0	$1,039,424	Shore Fairview Terrace and close upper Gate Street. This option includes installing jersey barrier barricades at each end of upper Gate Street. Stabilization of Fairview Terrace is similar to Option 2. This option also includes the cost to repair the existing distessed pavement, install a new sidewalk and lighting, plus upgrade the existing 8" waterline, 8" sewer line and 12" storm drain line on Fairview Terrace. This option includes a new guard rail on Fairview Terrace.
Option 1	$1,786,828	Shore Fairview Terrace and narrow upper Gate Street to 1-lane use with a signal light at each end. This option includes removing the conctrete wall extension above the stone wall and re-grading up to the remaining single lane on upper Gate Street. Stabilization of Fairview Terrace will be similar to Option 2. This option also includes the cost to repair the existing distessed pavement, install a new sidewalk and lighting, plus upgrade the existing 8" waterline, 8" sewer line and 12" storm drain line. This option includes a new guard rail on Fairview Terrace and a new bridge rail on upper Gate Street.
Option 2	$1,962,125	Install dense-graded crushed stone fill on 1.5:1 Slope to butress the existing wall. This option includes the cost to repair the existing distessed pavement, install a new sidewalk, lighting and guardrail, plus upgrade the existing 8" waterline, 8" sewer line and 12" storm drain line. This option includes moving 1 house below the wall.
Option 3	$1,879,407	Modify Option 2 by installing Redi-Rock wall at toe of slope near existing house to keep the house in its current location.
Option 4	$2,183,789	Install dense-graded crushed stone on a 1.8:1 Slope to butress the existing wall terminating in a stepped Redi-Rock wall and chain-link fence at toe of slope. This option includes the cost to repair the existing distessed pavement, install a new sidewalk, lighting and guardrail, plus upgrade the existing 8" waterline, 8" sewer line and 12" storm drain line. This option impacts vehicle access to the rear of the house at 1 location below the wall.
Option 5	$3,150,657	Install cantilevered sheeting on the downhill side of the existing wall and filling the annular space between the sheeting and wall with dense-graded crushed stone. This option includes the cost to repair the existing distessed pavement, install a new sidewalk, lighting and guardrail, plus upgrade the existing 8" waterline, 8" sewer line and 12" storm drain line. Vibration from this option may add to the distress of the existing roadway. Due to the required sheeting depth, additional subsurface exploration will likely be required.
Option 6	$2,468,093	Install anchored sheeting on the downhill side of the existing wall and filling the annular space between the sheeting and wall with dense-graded crushed stone. The sheeting will be anchored using tiebacks into the soil under the roadway and wales to spread the load to the sheeting. This option includes the cost to repair the existing distessed pavement, install a new sidewalk, lighting and guardrail, plus upgrade the existing 8" waterline, 8" sewer line and 12" storm drain line. Vibration from this option may add to the distress of the existing roadway. The depth of the tiebacks may necessitate replacing the existing sewer.
Option 7	$2,285,408	Install tiebacks into the soil under the roadway and soldier piles and structural concrete infill on the downhill side of the existing wall to spread the load to the existing wall. This option includes the cost to repair the existing distessed pavement, install a new sidewalk, lighting and guardrail, plus upgrade the existing 8" waterline, 8" sewer line and 12" storm drain line. The depth of the tiebacks may necessitate replacing the existing sewer line.

Option 8	$2,860,550	Remove the existing wall and construct a new cantilevered structural concrete retaining wall. This option includes upgrading all municipal utilities within the roadway, as well as, replacing the existing distressed pavement plus adding lighting and a new bridge rail. This option results in maximum disruption to the existing roadway and potential construction coordination and homeowner access issues.

Note 1: For Options 1 thru 7, the costs may be reduced by approximately $1,084,358 if improving the roadway, sidewalk, guardrail & utilities is not done.

Note 2: For Option 8, the cost of improving the roadway, sidewalk, guardrail & utilities is required due to the extent of excavation for the new wall.

SEGMENT 1 PROJECTED CONSTRUCTION COST (OPTION 0]
CLOSE UPPER GATE STREET PLUS STABILIZE FAIRVIEW TERRACE USING SLOPING STONE FIL

ITEM	QUANTITY	UNIT	UNIT PRICE	AMOUNT	COMMENTS
General Mobilization	1	LS	$15,000.00	$15,000.00	
Silt Fence	350	LF	$3.08	$1,078.00	
Clear & Grub (19,010 SF)	0.436	AC	$12,270.64	$5,350.00	
6"x4,867 SF Remove Pavement	90	CY	$15.97	$1,437.30	
6"x2,765 SF Remove Sidewalk	51	CY	$15.97	$814.47	
Gravel Excavation (18"x7,632 SF)	424	CY	$7.09	$3,006.16	In-place CY
Drain Trench Excavation (3'x3'x270')	90	CY	$12.64	$1,137.60	In-place CY
Waterline Trench Excavation (3'x5'x240')	133	CY	$12.64	$1,681.12	In-place CY
Sewer Trench Excavation (3'x5'x210')	117	CY	$12.64	$1,478.88	In-place CY
Concrete Demolition	67.19	CY	$289.32	$19,439.41	In-place CY
Haul	1,264	LCY	$9.00	$11,376.00	Loose CY (30% Fluff Factor)
Gran. Fill (90+133+117)	340	CY	$26.64	$9,057.60	
18"x6,744 SF Fine Crushed Gravel	682.83	Tons	$24.13	$16,476.69	VTAOT 704.05
Remove 12" Concrete Drain	270	LF	$10.15	$2,740.50	
New 15" PE Drain	270	LF	$37.50	$10,125.00	
Remove Catch Basins	2	EA	$391.00	$782.00	
New Catch Basins	2	EA	$2,993.00	$5,986.00	
Remove 8" CI Waterline	240	LF	$10.15	$2,436.00	
New 8" DI Waterline	240	LF	$47.00	$11,280.00	
8"x8"x8" Wet-tap	2	EA	$2,500.00	$5,000.00	
New 8" Valves	1	EA	$1,725.00	$1,725.00	
Remove Hydrant Assembly	1	EA	$630.00	$630.00	
New Hydrant Assembly	1	EA	$5,000.00	$5,000.00	
Remove 8" DI Sewer	210	LF	$10.15	$2,131.50	
New 8" DI Sewer	210	LF	$40.00	$8,400.00	
Remove SS Manholes	0	EA	$391.00	$0.00	
New SS Manholes	1	EA	$3,103.00	$3,103.00	
Dense Graded Crushed Stone	4,737	CY	$33.00	$156,321.00	In-place CY
5" Concrete Sidewalk (888 SF)	98.67	SY	$49.85	$4,918.70	
3" New Pavement (6,655 SF)	124.78	Tons	$79.40	$9,907.53	
New Topsoil (20,970 SF)	388	CY	$27.40	$10,631.20	
Restoration (20,970 SF)	2,330	SY	$5.00	$11,650.00	
Jute Matting (20,970 SF)	2,330	SY	$2.54	$5,918.20	
Remove Existing Railing	498	LF	$7.59	$3,779.82	
New Guard Rail	227	LF	$15.94	$3,618.38	
New 6' Chain-link Fence	278	LF	$15.72	$4,370.16	
Historic Light-poles	2	EA	$5,400.00	$10,800.00	
Light-pole bases	2	EA	$1,000.00	$2,000.00	
Lighting Conduit	250	LF	$16.00	$4,000.00	
Fairview Split-lane Sheeting (5,875 SF)	64.63	Tons	$2,100.00	$135,723.00	Gr 50 PZ 22
Easements & Legal	1	LS	$72,639.00	$72,639.00	Maximum
Resident Inspection	88.00	Days	$600.00	$52,800.00	4 Months

Traffic Control	88.00	Days	$650.00	$57,200.00	4 Months
Sub-total				**$692,949.22**	
10% Overhead & Profit				**$69,294.92**	
15% Engineering & Testing				**$103,942.38**	
25% Contingency				**$173,237.30**	
Total				**$1,039,423.83**	**2013 Dollars**

Segment 1

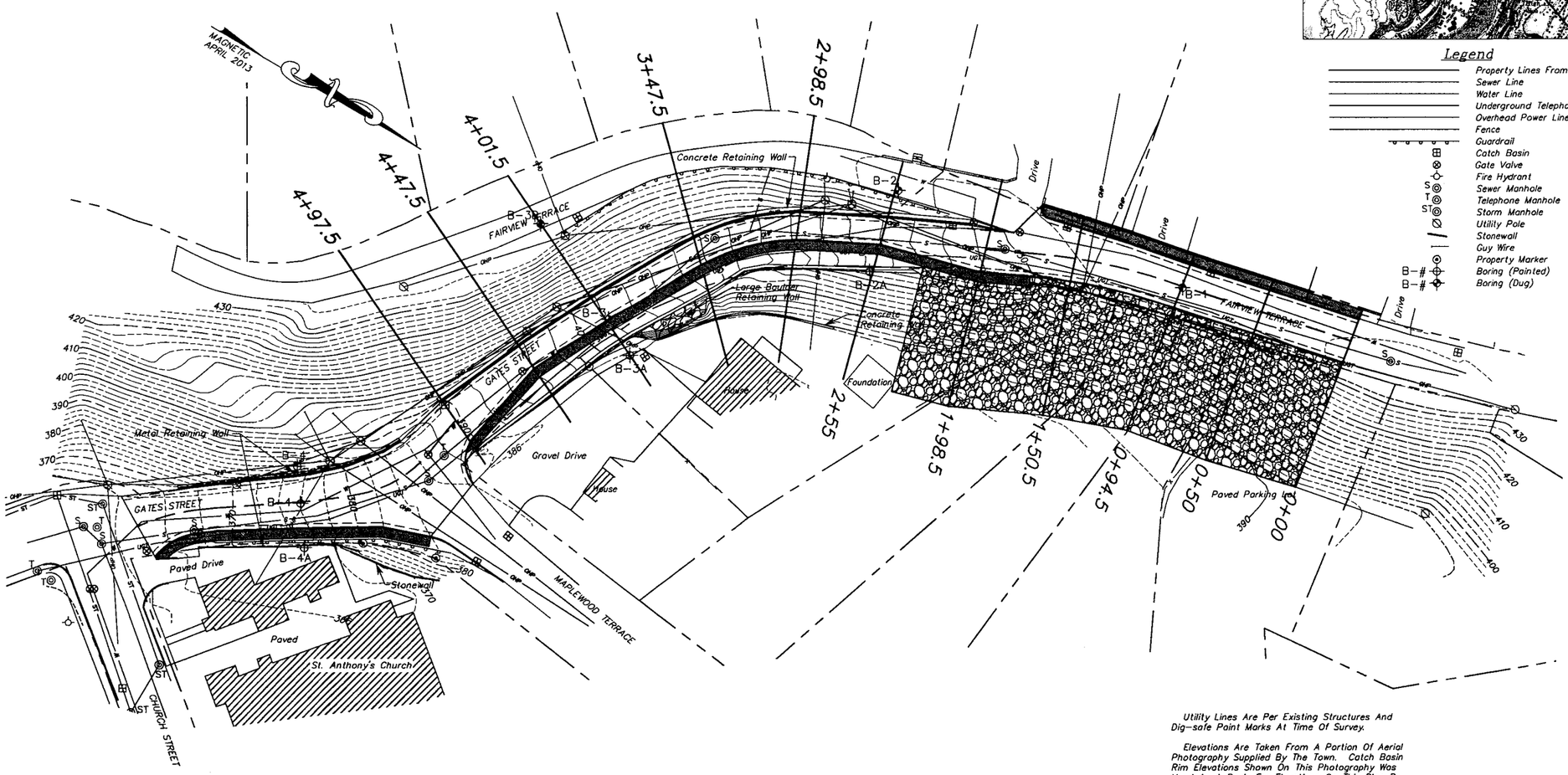

Location Map

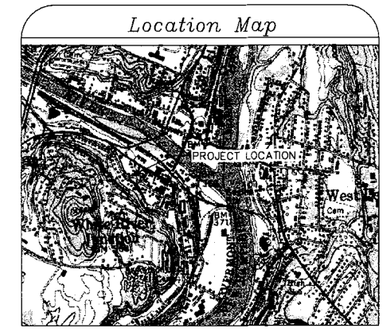

Legend

- Property Lines From GIS Info.
- Sewer Line
- Water Line
- Underground Telephone Line
- Overhead Power Line
- Fence
- Guardrail
- Catch Basin
- Gate Valve
- Fire Hydrant
- Sewer Manhole
- Telephone Manhole
- Storm Manhole
- Utility Pole
- Stonewall
- Guy Wire
- Property Marker
- B-# Boring (Painted)
- B-# Boring (Dug)

Utility Lines Are Per Existing Structures And Dig-safe Point Marks At Time Of Survey.

Elevations Are Taken From A Portion Of Aerial Photography Supplied By The Town. Catch Basin Rim Elevations Shown On This Photography Was Used As A Basis For Elevations On This Plan By Averaging.

Property lines are approximate as taken from Vermont GIS data and fit to the features.

This field survey was completed on 4/11/13 using a Topcon Total Station.

Reference plan: "Sidewalk Layout Plan For Town Of Hartford - Church Street Sidewalk" by Pathways Consulting, LLC, dated 8/13/10.

GRAPHIC SCALE

40 0 20 40 80 160

(IN FEET)
1 inch = 40 ft.

Option 1 — One Lane (Upper Gate)

SURVEY LDY/BEG	SUMMIT ENGINEERING, INC Engineers • Surveyors • Planners • Landscape Architects 1233 Shelburne Road C2 South Burlington, VT 05403 (802) 658-5588	TOPOGRAPHIC SURVEY	DATE 4/26/13
DESIGNED		TOWN OF HARTFORD	DRAWING NO. B1
DRAWN BEG		GATES STREET WHITE RIVER JCT., VT	PROJECT NO. 8251
CHECKED LDY			
SCALE 1"=40'		©	

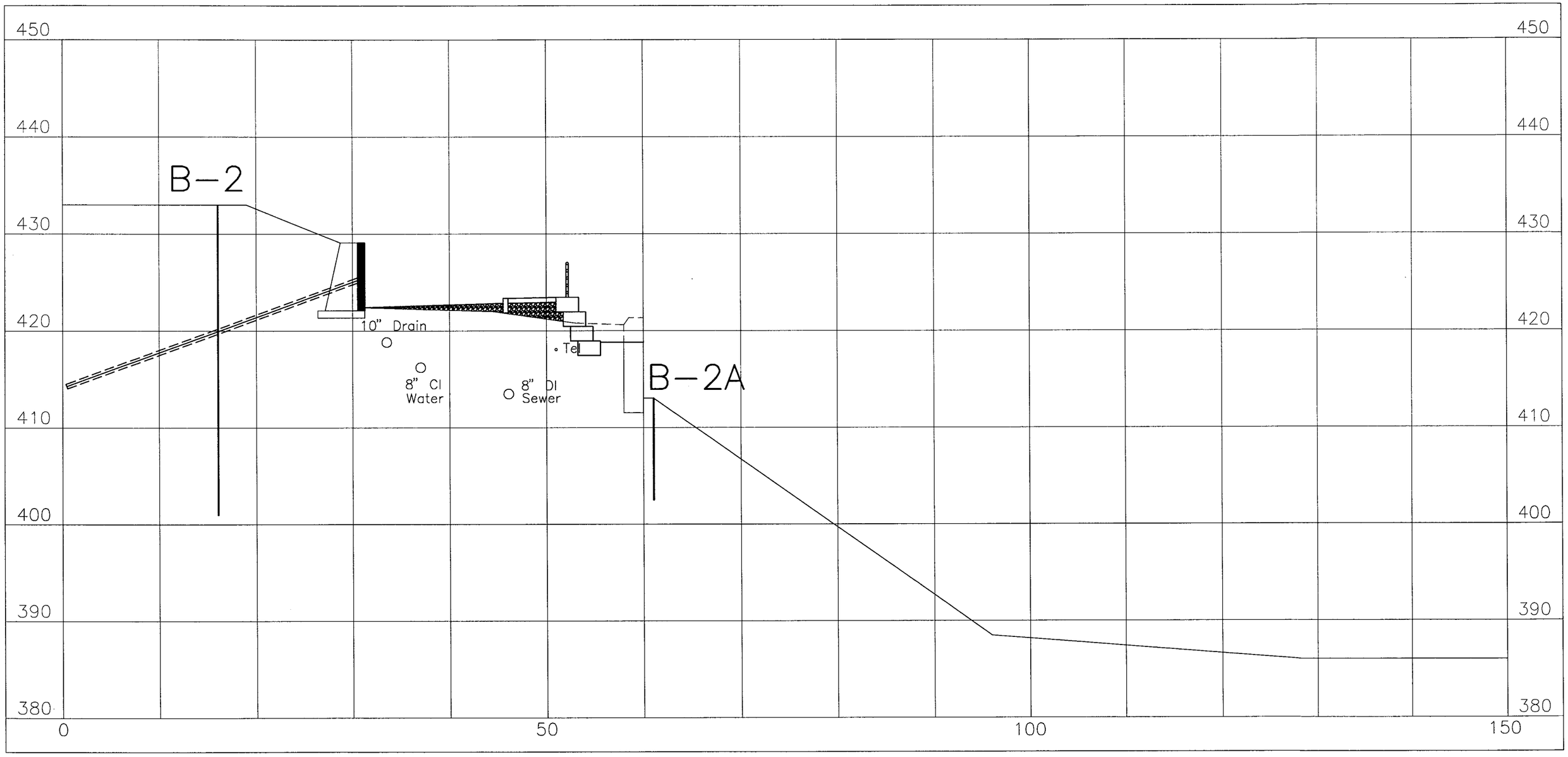

SECTION 2+55 (Option 1 – Narrow Upper Gate)

SCALE: 1" = 10' HOR.
1" = 10' VERT.

SEGMENT 1 PROJECTED CONSTRUCTION COST (OPTION 1)
REDUCE UPPER GATE STREET TO 1-LANE PLUS STABILIZE FAIRVIEW TERRACE USING SLOPING STONE FIL

ITEM	QUANTITY	UNIT	UNIT PRICE	AMOUNT	COMMENTS
General Mobilization	1	LS	$15,000.00	$15,000.00	
Silt Fence	540	LF	$3.08	$1,663.20	
Clear & Grub (19,010 SF)	0.436	AC	$12,270.64	$5,350.00	
6"x14,072 SF Remove Pavement	261	CY	$15.97	$4,168.17	
6"x2,765 SF Remove Sidewalk	51	CY	$15.97	$814.47	
Shore Wall Segment 4 (Option 3)	1	LS	$148,944.80	$148,944.80	
Gravel Excavation (18"x16,837 SF)	936	CY	$7.09	$6,636.24	In-place CY
Drain Trench Excavation (3'x3'x590')	197	CY	$12.64	$2,490.08	In-place CY
Waterline Trench Excavation (3'x5'x570')	317	CY	$12.64	$4,006.88	In-place CY
Sewer Trench Excavation (3'x5'x550')	306	CY	$12.64	$3,867.84	In-place CY
Slope Excavation	118	CY	$12.64	$1,491.52	In-place CY
Concrete Demolition	57.67	CY	$289.32	$16,685.08	In-place CY
Haul	2,917	LCY	$9.00	$26,254.80	Loose CY (30% Fluff Factor)
Structural Concrete	66.52	CY	$547.08	$36,391.76	
Rebar	5,281.00	LBS	$1.17	$6,178.77	
Gran. Fill (197+317+306)	820	CY	$26.64	$21,844.80	
18"x14,136 SF Fine Crushed Gravel	1,431.27	Tons	$24.13	$34,536.55	VTAOT 704.05
Fine Crushed Gravel Pad (6"x333 SF)	11	Tons	$24.13	$265.43	VTAOT 704.05
18"x28"x46" Redi-Rock Blocks	52	EA	$150.00	$7,800.00	$25/SF
Remove 12" Concrete Drain	590	LF	$10.15	$5,988.50	
New 15" PE Drain	590	LF	$37.50	$22,125.00	
Remove Catch Basins	4	EA	$391.00	$1,564.00	
New Catch Basins	5	EA	$2,993.00	$14,965.00	
Remove 8" CI Waterline	570	LF	$10.15	$5,785.50	
New 8" DI Waterline	570	LF	$47.00	$26,790.00	
8"x8"x8" Wet-tap	3	EA	$2,500.00	$7,500.00	
New 8" Valves	1	EA	$1,725.00	$1,725.00	
Remove Hydrant Assembly	1	EA	$630.00	$630.00	
New Hydrant Assembly	1	EA	$5,000.00	$5,000.00	
Remove 8" DI Sewer	550	LF	$10.15	$5,582.50	
New 8" DI Sewer	550	LF	$40.00	$22,000.00	
Remove SS Manholes	2	EA	$391.00	$782.00	
New SS Manholes	3	EA	$3,103.00	$9,309.00	
Dense Graded Crushed Stone	4,737	CY	$33.00	$156,321.00	In-place CY
5" Concrete Sidewalk (2,540 SF)	282.22	SY	$49.85	$14,068.67	
3" New Pavement (11,596 SF)	217.43	Tons	$79.40	$17,263.94	
Added Granular Fill	90	CY	$26.64	$2,397.60	
New Topsoil (20,970 SF)	388	CY	$27.40	$10,631.20	
Restoration (20,970 SF)	2,330	SY	$5.00	$11,650.00	
Jute Matting (20,970 SF)	2,330	SY	$2.54	$5,918.20	
Remove Existing Railing	498	LF	$7.59	$3,779.82	
New Guard Rail	227	LF	$15.94	$3,618.38	

New Bridge Rail	278	LF	$181.19	$50,370.82	
Traffic Signals	2	EA	$30,000.00	$60,000.00	
Historic Light-poles	4	EA	$5,400.00	$21,600.00	
Light-pole bases	4	EA	$1,000.00	$4,000.00	
Lighting Conduit	600	LF	$16.00	$9,600.00	
Fairview Split-lane Sheeting (5,875 SF)	64.63	Tons	$2,100.00	$135,723.00	Gr 50 PZ 22
Easements & Legal	1	LS	$72,639.00	$72,639.00	Maximum
Resident Inspection	110.00	Days	$600.00	$66,000.00	5 Months
Traffic Control	110.00	Days	$650.00	$71,500.00	5 Months
Sub-total				**$1,191,218.52**	
10% Overhead & Profit				**$119,121.85**	
15% Engineering & Testing				**$178,682.78**	
25% Contingency				**$297,804.63**	
Total				**$1,786,827.78**	**2013 Dollars**

SEGMENT 1 PROJECTED CONSTRUCTION COST (OPTION 2B-7B)
BASIC INFRASTRUCTURE COST FOR OPTIONS 2 THRU 7

ITEM	QUANTITY	UNIT	UNIT PRICE	AMOUNT	COMMENTS
General Mobilization	1	LS	$15,000.00	$15,000.00	
6"x14,072 SF Remove Pavement	261	CY	$15.97	$4,168.17	
6"x2,765 SF Remove Sidewalk	51	CY	$15.97	$814.47	
Shore Wall Segment 4 (Option 3)	1	LS	$148,944.80	$148,944.80	
Gravel Excavation (18"x16,837 SF)	936	CY	$7.09	$6,636.24	In-place CY
Drain Trench Excavation (3'x3'x590')	197	CY	$12.64	$2,490.08	In-place CY
Waterline Trench Excavation (3'x5'x570')	317	CY	$12.64	$4,006.88	In-place CY
Sewer Trench Excavation (3'x5'x550')	306	CY	$12.64	$3,867.84	In-place CY
Haul	2,688	LCY	$9.00	$24,195.60	Loose CY (30% Fluff)
Granular Fill (2,068-51-130-936)	951	CY	$26.64	$25,334.64	
18"x16,837 SF Fine Crushed Gravel	1,704.75	Tons	$24.13	$41,135.62	VTAOT 704.05
Remove 12" Concrete Drain	590	LF	$10.15	$5,988.50	
New 15" PE Drain	590	LF	$37.50	$22,125.00	
Remove Catch Basins	4	EA	$391.00	$1,564.00	
New Catch Basins	5	EA	$2,993.00	$14,965.00	
Remove 8" CI Waterline	570	LF	$10.15	$5,785.50	
New 8" DI Waterline	570	LF	$47.00	$26,790.00	
8"x8"x8" Wet-tap	3	EA	$2,500.00	$7,500.00	
New 8" Valves	1	EA	$1,725.00	$1,725.00	
Remove Hydrant Assembly	1	EA	$630.00	$630.00	
New Hydrant Assembly	1	EA	$3,000.00	$3,000.00	
Remove 8" DI Sewer	550	LF	$10.15	$5,582.50	
New 8" DI Sewer	550	LF	$40.00	$22,000.00	
Remove SS Manholes	2	EA	$391.00	$782.00	
New SS Manholes	3	EA	$3,103.00	$9,309.00	
Remove Existing Railing	498	LF	$7.59	$3,779.82	
New Guard Rail	520	LF	$15.94	$8,288.80	
New Granite Curb	700	LF	$25.95	$18,165.00	
5" Concrete Sidewalk (2,514 SF)	280	SY	$49.85	$13,958.00	
3" New Pavement (14,072 SF)	263.85	Tons	$79.40	$20,949.69	
Historic Light-poles	4	EA	$5,400.00	$21,600.00	
Light-pole bases	4	EA	$1,000.00	$4,000.00	
Lighting Conduit	600	LF	$16.00	$9,600.00	
Fairview Split-lane Sheeting (5,875 SF)	64.63	Tons	$2,100.00	$135,723.00	Gr 50 PZ 22
Resident Inspection	66.00	Days	$600.00	$39,600.00	3 Months
Traffic Control	66.00	Days	$650.00	$42,900.00	3 Months
Sub-total				**$722,905.15**	
10% Overhead & Profit				**$72,290.51**	
15% Engineering & Testing				**$108,435.77**	
25% Contingency				**$180,726.29**	
Total				**$1,084,357.72**	**2013 Dollars**

Segment 1

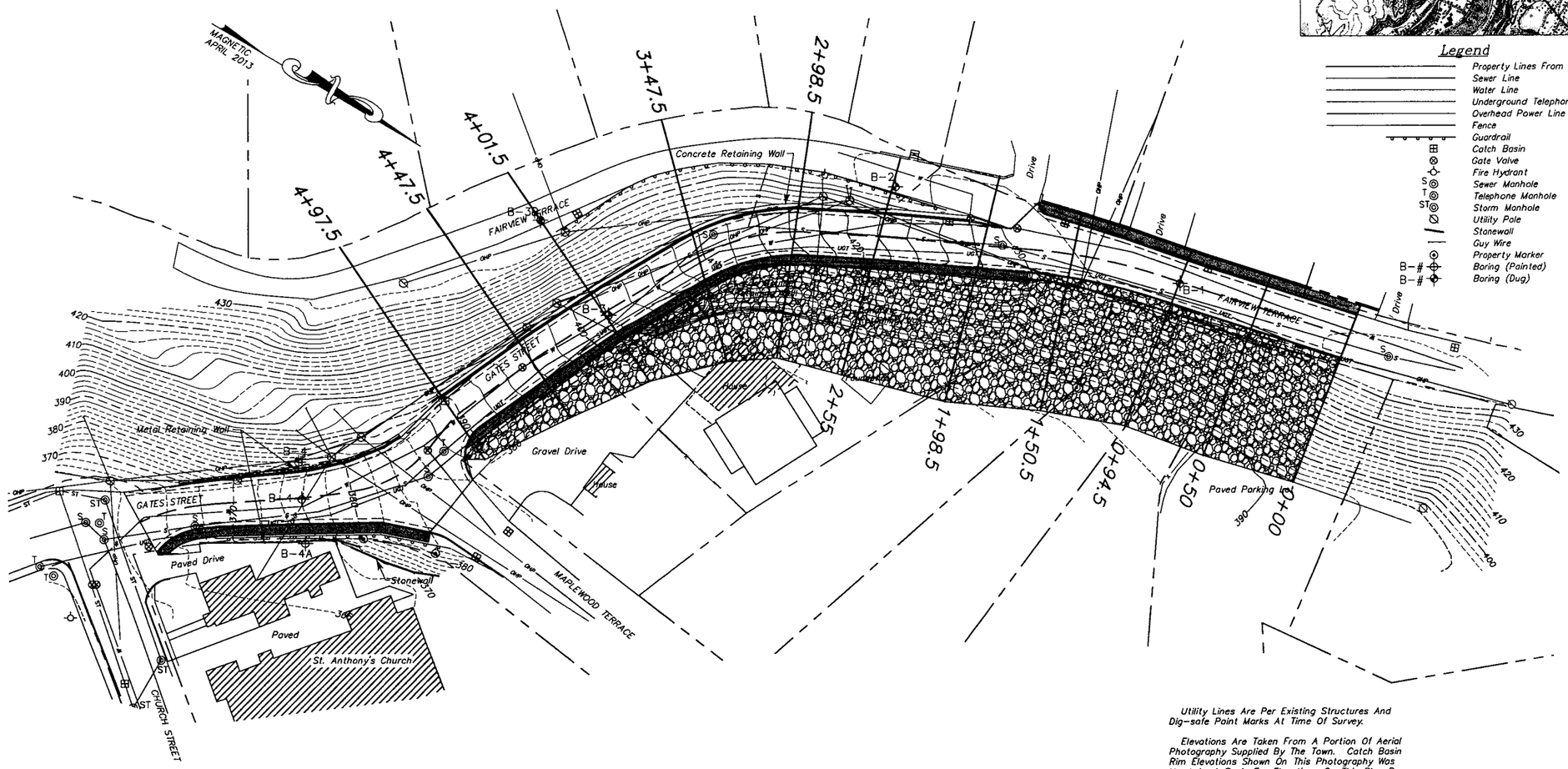

Location Map

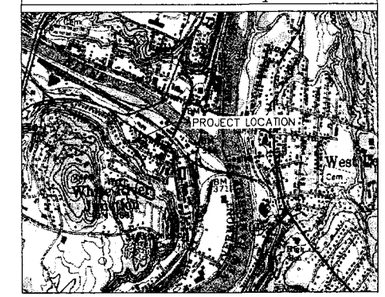

Legend

- Property Lines From GIS Info.
- Sewer Line
- Water Line
- Underground Telephone Line
- Overhead Power Line
- Fence
- Guardrail
- Catch Basin
- Gate Valve
- Fire Hydrant
- Sewer Manhole
- Telephone Manhole
- Storm Manhole
- Utility Pole
- Stonewall
- Guy Wire
- Property Marker
- B-# Boring (Painted)
- B-# Boring (Dug)

Utility Lines Are Per Existing Structures And Dig-safe Paint Marks At Time Of Survey.

Elevations Are Taken From A Portion Of Aerial Photography Supplied By The Town. Catch Basin Rim Elevations Shown On This Photography Was Used As A Basis For Elevations On This Plan By Averaging.

Property lines are approximate as taken from Vermont GIS data and fit to the features.

This field survey was completed on 4/11/13 using a Topcon Total Station.

Reference plan: "Sidewalk Layout Plan For Town Of Hartford – Church Street Sidewalk" by Pathways Consulting, LLC, dated 8/13/10.

GRAPHIC SCALE

40 0 20 40 80 160

(IN FEET)
1 inch = 40 ft.

Option 2 – 1.5:1 Stone Fill

SURVEY LDY/BEG	SUMMIT ENGINEERING, INC Engineers • Surveyors • Planners • Landscape Architects 1233 Shelburne Road C2 South Burlington, VT 05403 (802) 658-5588	TOPOGRAPHIC SURVEY	DATE 4/26/13
DESIGNED		TOWN OF HARTFORD	DRAWING NO. B1
DRAWN BEG		GATES STREET WHITE RIVER JCT., VT	PROJECT NO. 8251
CHECKED LDY			
SCALE 1"=40'			©

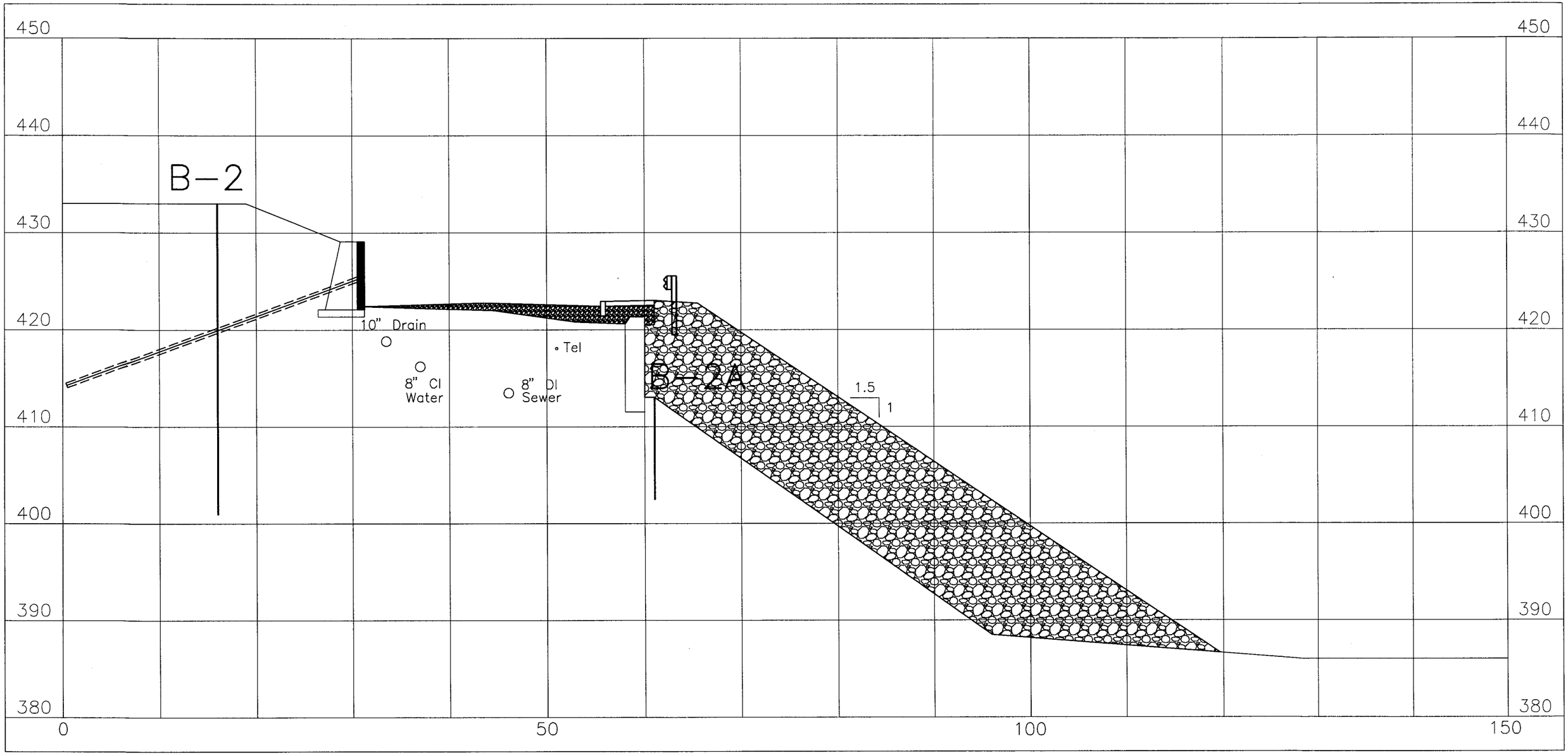

SECTION 2+55 (Option 2 – 1.5:1 Stone Fill)

SCALE: 1" = 10' HOR.
1" = 10' VERT.

SEGMENT 1 PROJECTED CONSTRUCTION COST (OPTION 2A)
COST FOR SLOPING STONE FILL STABILIZATION ALONG UPPER GATE STREET AND FAIRVIEW TERRACE
MOVE EXISTING DUPLEX

ITEM	QUANTITY	UNIT	UNIT PRICE	AMOUNT	COMMENTS
General Mobilization	1	LS	$15,000.00	$15,000.00	
Silt Fence	540	LF	$3.08	$1,663.20	
Clear & Grub (18,531 SF)	0.425	AC	$12,270.64	$5,215.02	
Strip Topsoil (26,414 SF)	489	CY	$7.09	$3,467.01	In-place CY
Remove Pavement (1166 SF)	11	CY	$15.97	$175.67	In-place CY
2'x4'x130' Concrete Demolition	38.50	CY	$289.32	$11,138.82	In-place CY
Haul	700	LCY	$9.00	$6,300.00	Loose CY (30% Fluff Factor)
Fine Crushed Gravel (186.8 CY)	340	Tons	$24.13	$8,204.20	In-place CY
Dense Graded Crushed Stone	7,787	CY	$33.00	$256,971.00	In-place CY
New Topsoil (29,362 SF)	544	CY	$27.40	$14,905.60	In-place CY
Restoration (29,362 SF)	3,262	SY	$5.00	$16,310.00	
Jute Matting (29,362 SF)	3,262	SY	$2.54	$8,285.48	
Move House	1,600	SF	$44.00	$70,400.00	Includes New Foundation
Move Porches	500	SF	$17.00	$8,500.00	
Easements & Legal	1	LS	$103,642.00	$103,642.00	Maximum
Resident Inspection	44.00	Days	$600.00	$26,400.00	2 Months
Traffic Control	44.00	Days	$650.00	$28,600.00	2 Months
Sub-total				**$585,178.00**	
10% Overhead & Profit				**$58,517.80**	
15% Engineering & Testing				**$87,776.70**	
25% Contingency				**$146,294.50**	
Total				**$877,767.00**	**2013 Dollars**

Segment 1

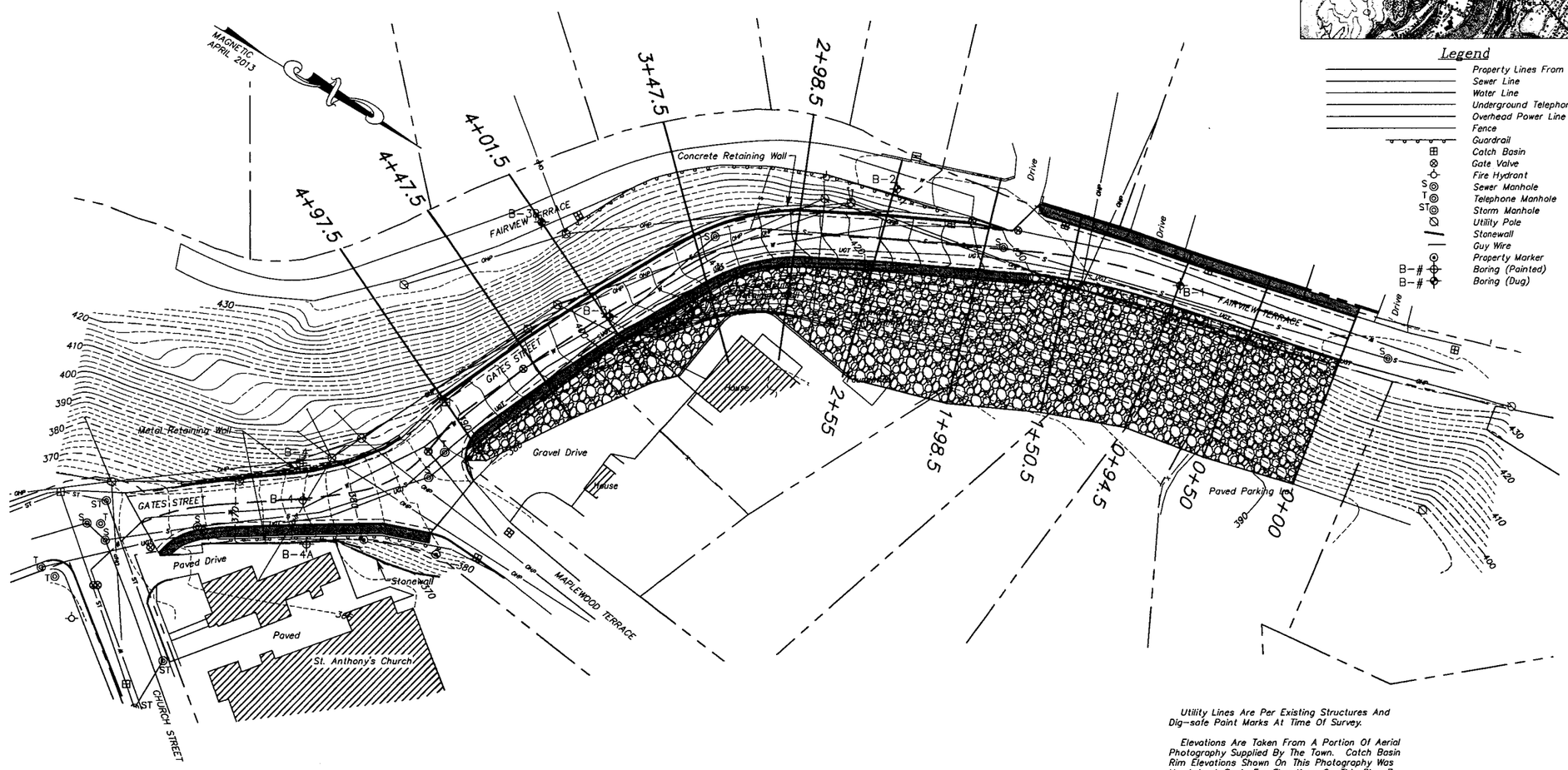

Location Map

Legend

- Property Lines From GIS Info.
- Sewer Line
- Water Line
- Underground Telephone Line
- Overhead Power Line
- Fence
- Guardrail
- Catch Basin
- Gate Valve
- Fire Hydrant
- Sewer Manhole
- Telephone Manhole
- Storm Manhole
- Utility Pole
- Stonewall
- Guy Wire
- Property Marker
- B-# Boring (Painted)
- B-# Boring (Dug)

Utility Lines Are Per Existing Structures And Dig-safe Paint Marks At Time Of Survey.

Elevations Are Taken From A Portion Of Aerial Photography Supplied By The Town. Catch Basin Rim Elevations Shown On This Photography Was Used As A Basis For Elevations On This Plan By Averaging.

Property lines are approximate as taken from Vermont GIS data and fit to the features.

This field survey was completed on 4/11/13 using a Topcon Total Station.

Reference plan: "Sidewalk Layout Plan For Town Of Hartford – Church Street Sidewalk" by Pathways Consulting, LLC, dated 8/13/10.

GRAPHIC SCALE

40 0 20 40 80 160

(IN FEET)
1 inch = 40 ft.

Option 3 – Stone Fill & Toe Sheeting

SURVEY LDY/BEG	SUMMIT ENGINEERING, INC Engineers • Surveyors • Planners • Landscape Architects 1233 Shelburne Road C2 South Burlington, VT 05403 (802) 658-5588	TOPOGRAPHIC SURVEY	DATE 4/26/13
DESIGNED		TOWN OF HARTFORD GATES STREET WHITE RIVER JCT., VT	DRAWING NO. B1
DRAWN BEG			PROJECT NO. 8251
CHECKED LDY			
SCALE 1"=40'			©

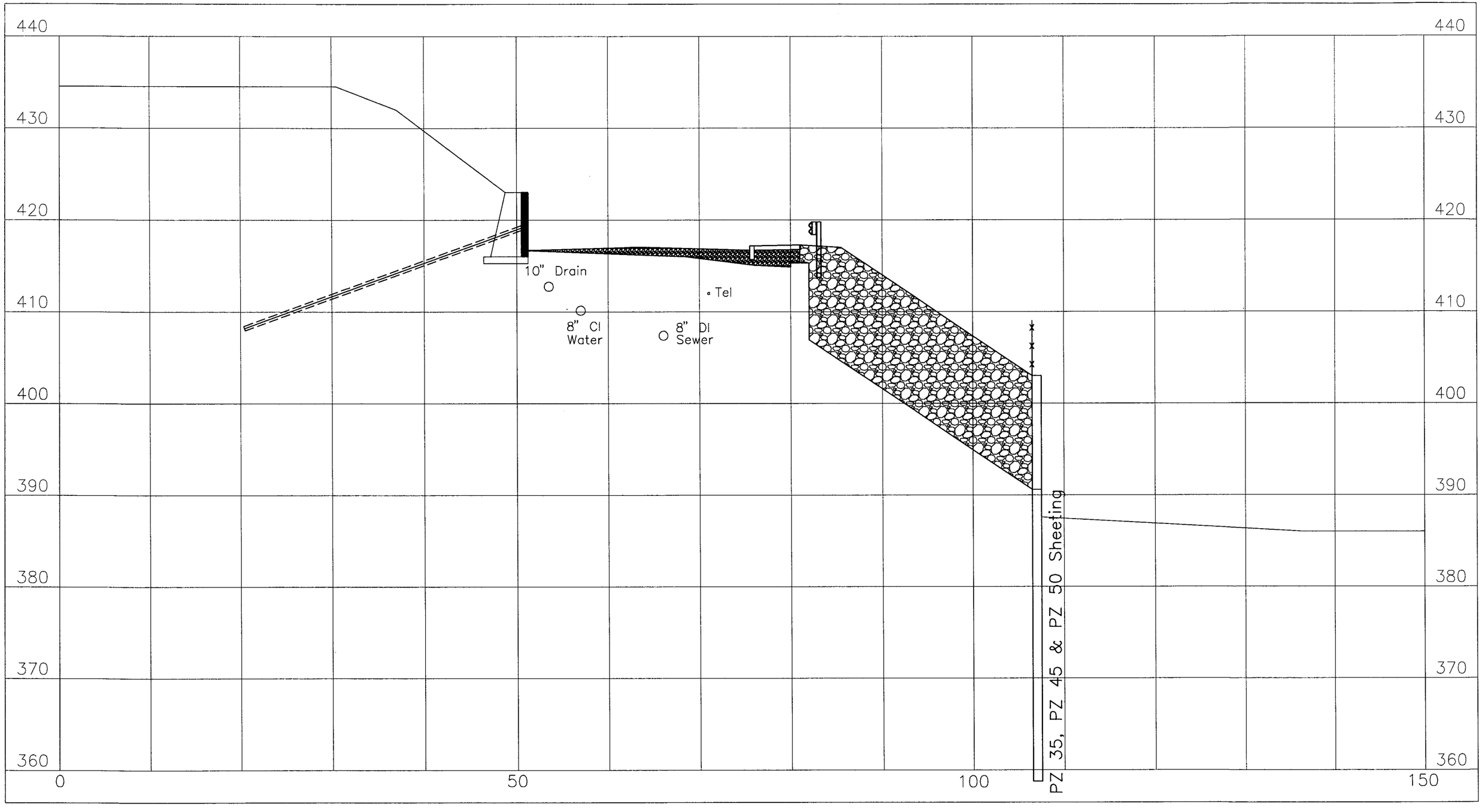

SECTION 2+98.50 (Option 3 – Toe Sheeting)

SCALE: 1" = 10' HOR.
1" = 10' VERT.

SEGMENT 1 PROJECTED CONSTRUCTION COST (OPTION 3A)
COST FOR SLOPING STONE FILL STABILIZATION ALONG UPPER GATE STREET AND FAIRVIEW TERRACE
INSTALL SHEETING OR REDI-ROCK WALL IN LIEU OF MOVING EXISTING DUPLEX

ITEM	QUANTITY	UNIT	UNIT PRICE	AMOUNT	COMMENTS
General Mobilization	1	LS	$15,000.00	$15,000.00	
Silt Fence	540	LF	$3.08	$1,663.20	
Clear & Grub (18,531 SF)	0.425	AC	$12,270.64	$5,215.02	
Strip Topsoil (24,882 SF)	461	CY	$7.09	$3,268.49	In-place CY
Remove Pavement (1166 SF)	11	CY	$15.97	$175.67	In-place CY
2'x4'x130' Concrete Demolition	38.50	CY	$289.32	$11,138.82	In-place CY
Haul	664	LCY	$9.00	$5,976.00	Loose CY (30% Fluff Factor)
Fine Crushed Gravel (186.8 CY)	340	Tons	$24.13	$8,204.20	In-place CY
Dense Graded Crushed Stone (7787-312)	7,475	CY	$33.00	$246,675.00	In-place CY
New Topsoil (27,830 SF)	515	CY	$27.40	$14,111.00	In-place CY
Restoration (27,830 SF)	3,092	SY	$5.00	$15,460.00	
Jute Matting (27,830 SF)	3,092	SY	$2.54	$7,853.68	
Sheeting Mobilization	1	EA	$15,000.00	$15,000.00	
Cantilevered Sheeting	66.87	Tons	$2,100.00	$140,427.00	
New 6' Chain-link Fence	124	LF	$15.72	$1,949.28	
Easements & Legal	1	LS	$97,812.00	$97,812.00	Maximum
Resident Inspection	44.00	Days	$600.00	$26,400.00	2 Months
Traffic Control	44.00	Days	$650.00	$28,600.00	2 Months
Sub-total				**$644,929.36**	
10% Overhead & Profit				**$64,492.94**	
15% Engineering & Testing				**$96,739.40**	
25% Contingency				**$161,232.34**	
Total				**$967,394.04**	**2013 Dollars**

Segment 1

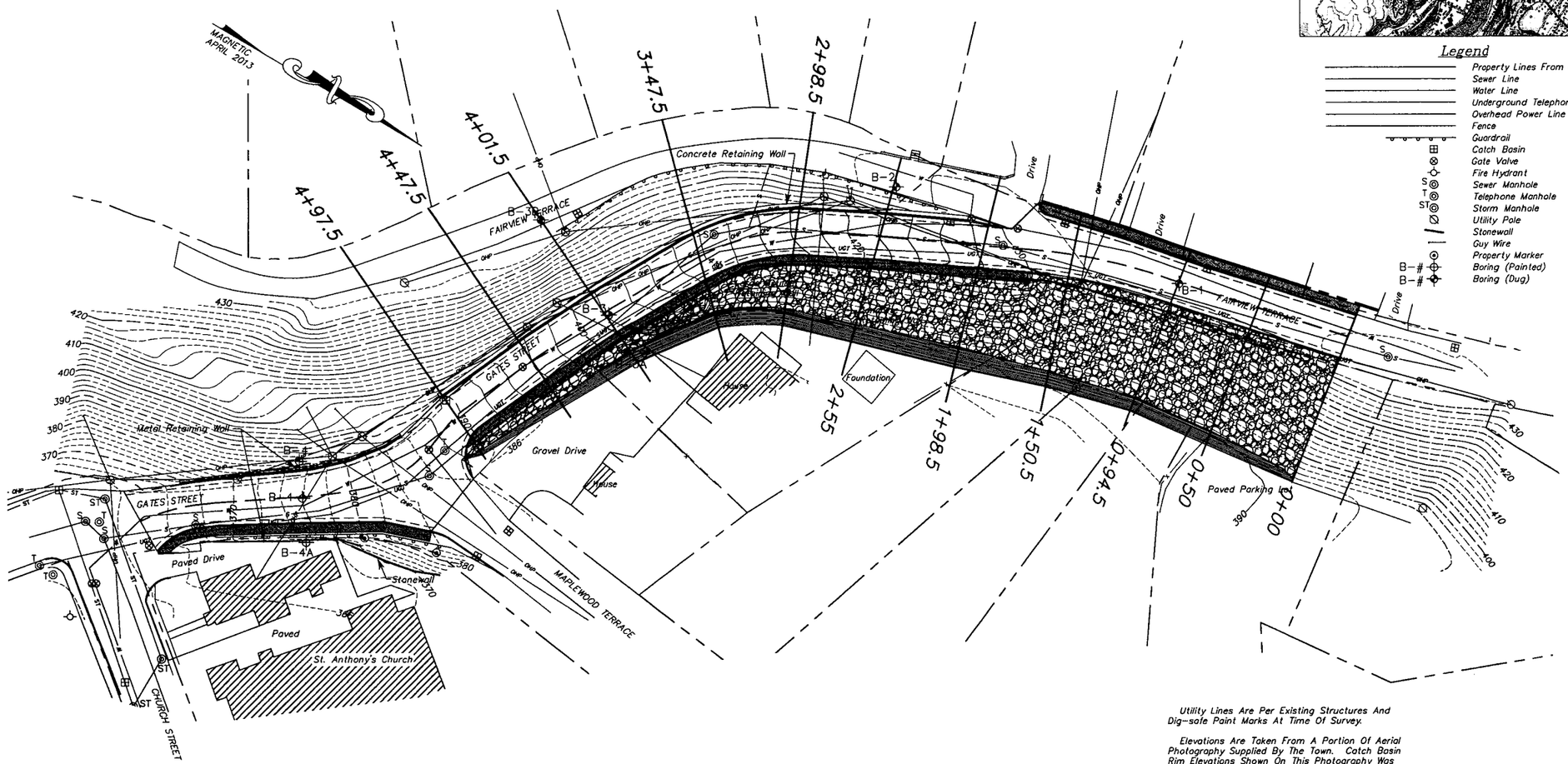

Location Map

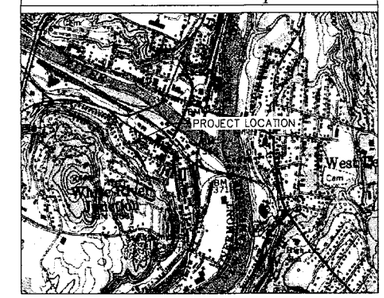

Legend

- Property Lines From GIS Info.
- Sewer Line
- Water Line
- Underground Telephone Line
- Overhead Power Line
- Fence
- Guardrail
- Catch Basin
- Gate Valve
- Fire Hydrant
- Sewer Manhole
- Telephone Manhole
- Storm Manhole
- Utility Pole
- Stonewall
- Guy Wire
- Property Marker
- B-# Boring (Painted)
- B-# Boring (Dug)

Utility Lines Are Per Existing Structures And Dig-safe Paint Marks At Time Of Survey.

Elevations Are Taken From A Portion Of Aerial Photography Supplied By The Town. Catch Basin Rim Elevations Shown On This Photography Was Used As A Basis For Elevations On This Plan By Averaging.

Property lines are approximate as taken from Vermont GIS data and fit to the features.

This field survey was completed on 4/11/13 using a Topcon Total Station.

Reference plan: "Sidewalk Layout Plan For Town Of Hartford – Church Street Sidewalk" by Pathways Consulting, LLC, dated 8/13/10.

GRAPHIC SCALE

40 0 20 40 80 160

(IN FEET)
1 inch = 40 ft.

Option 4– 1.8:1 Stone Fill & Toe Wall

SURVEY LDY/BEG	SUMMIT ENGINEERING, INC Engineers • Surveyors • Planners • Landscape Architects 1233 Shelburne Road C2 South Burlington, VT 05403 (802) 658-5588	TOPOGRAPHIC SURVEY	DATE 4/26/13
DESIGNED		TOWN OF HARTFORD GATES STREET WHITE RIVER JCT., VT	DRAWING NO. B1
DRAWN BEG			PROJECT NO. 8251
CHECKED LDY			
SCALE 1"=40'		©	

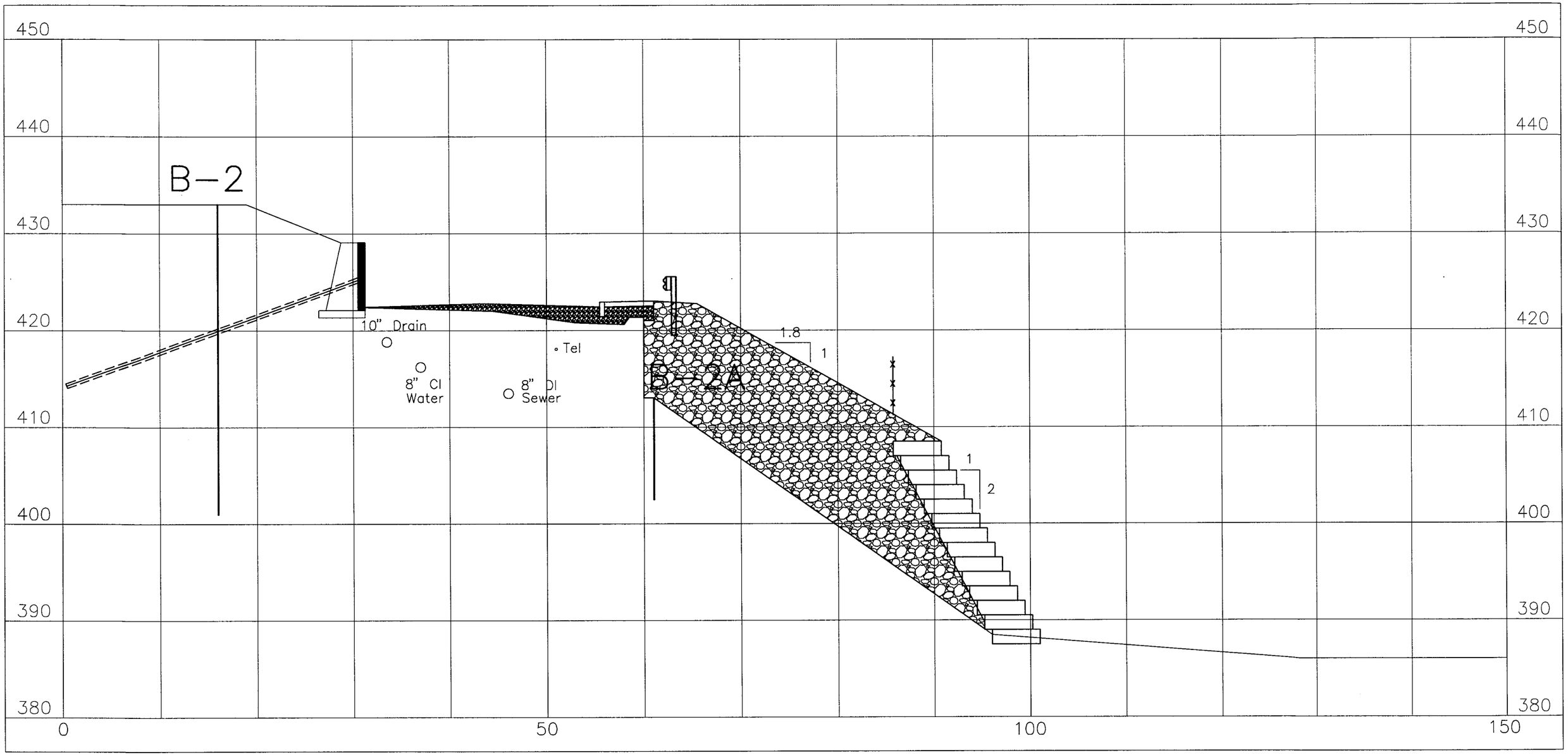

SECTION 2+55 (Option 4 – 1.8:1 Fill & Block Wall)

SCALE: 1" = 10' HOR.
1" = 10' VERT.

SEGMENT 1 PROJECTED CONSTRUCTION COST (OPTION 4A)
COST FOR SLOPING STONE FILL & TOE WALL STABILIZATION ALONG UPPER GATE STREET AND FAIRVIEW TERRACE

ITEM	QUANTITY	UNIT	UNIT PRICE	AMOUNT	COMMENTS
General Mobilization	1	LS	$15,000.00	$15,000.00	
Silt Fence	540	LF	$3.08	$1,663.20	
Clear & Grub (18,531 SF)	0.425	AC	$12,270.64	$5,215.02	
Strip Topsoil (21,225 SF)	393	CY	$7.09	$2,786.37	In-place CY
Remove Pavement (388 SF)	4	CY	$15.97	$63.88	In-place CY
2'x4'x130' Concrete Demolition	38.50	CY	$289.32	$11,138.82	In-place CY
Haul	565	LCY	$9.00	$5,085.00	Loose CY (30% Fluff Factor)
Fine Crushed Gravel Pad (6"x2830 SF)	96	Tons	$24.13	$2,316.48	VTAOT 704.05
18"x28"x46" Redi-Rock Blocks	31	EA	$150.00	$4,650.00	$25/SF
18"x41"x46" Redi-Rock Blocks	88	EA	$180.00	$15,840.00	$30/SF
18"x60"x46" Redi-Rock Blocks	1,302	EA	$210.00	$273,420.00	$35/SF
6' Chain-link Fence	490	LF	$15.72	$7,702.80	
Fine Crushed Gravel (187.8 CY)	342	Tons	$24.13	$8,252.46	In-place CY
Dense Graded Crushed Stone	6,184	CY	$33.00	$204,072.00	In-place CY
New Topsoil (17,646 SF)	327	CY	$27.40	$8,959.80	In-place CY
Restoration (17,646 SF)	1,961	SY	$5.00	$9,805.00	
Jute Matting (17,646 SF)	1,961	SY	$2.54	$4,980.94	
Easements & Legal	1	LS	$97,002.00	$97,002.00	Maximum
Resident Inspection	44.00	Days	$600.00	$26,400.00	2 Months
Traffic Control	44.00	Days	$650.00	$28,600.00	2 Months
Sub-total				**$732,953.77**	
10% Overhead & Profit				**$73,295.38**	
15% Engineering & Testing				**$109,943.07**	
25% Contingency				**$183,238.44**	
Total				**$1,099,430.66**	**2013 Dollars**

Segment 1 — Options 5 to 8

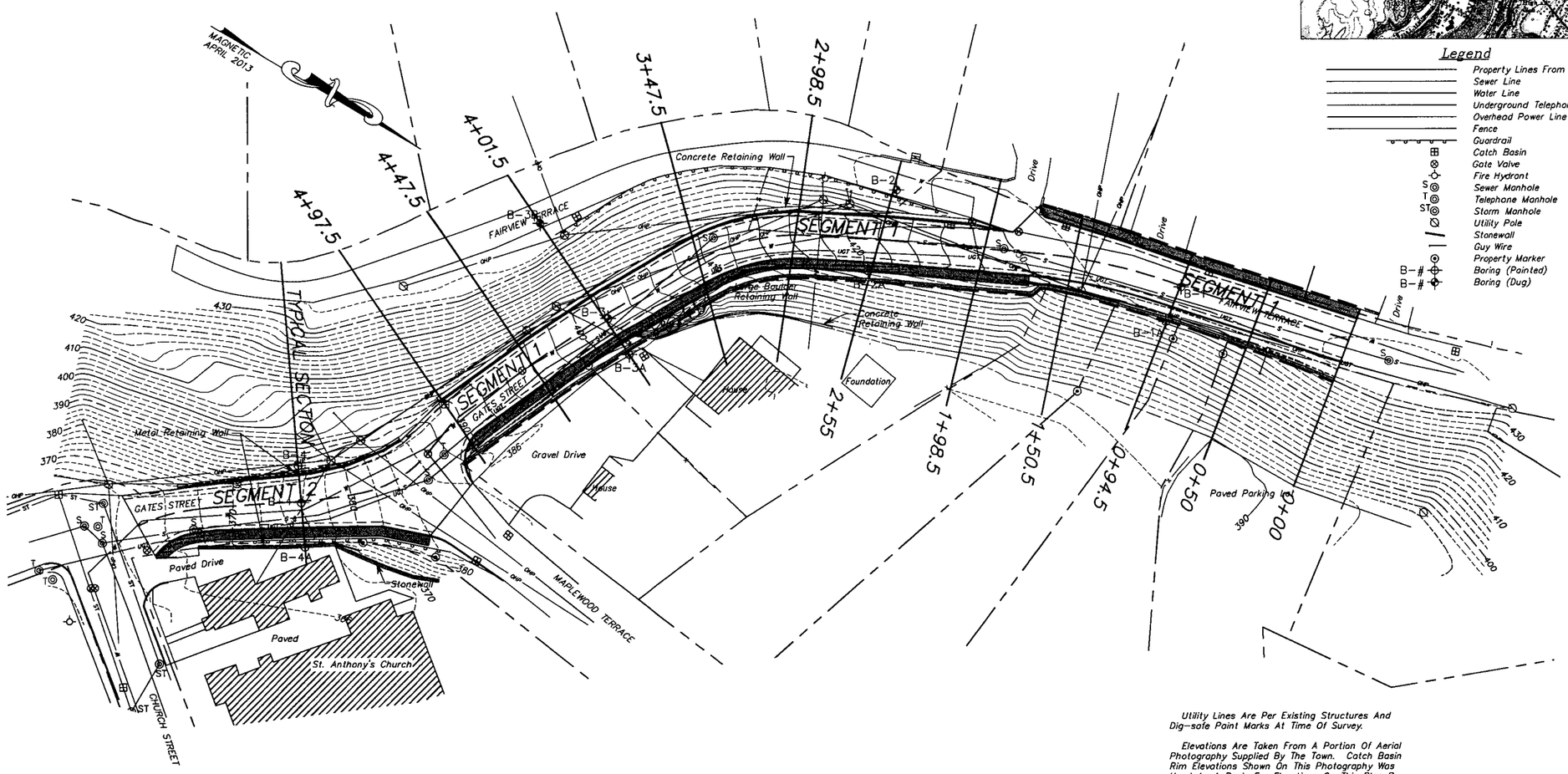

Location Map

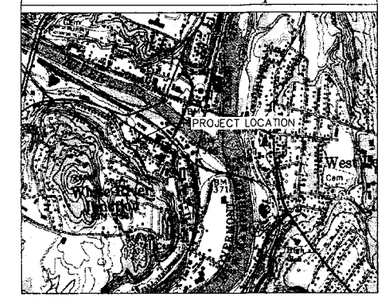

Legend

- Property Lines From GIS Info.
- Sewer Line
- Water Line
- Underground Telephone Line
- Overhead Power Line
- Fence
- Guardrail
- Catch Basin
- Gate Valve
- Fire Hydrant
- S — Sewer Manhole
- T — Telephone Manhole
- ST — Storm Manhole
- Utility Pole
- Stonewall
- Guy Wire
- Property Marker
- B-# — Boring (Painted)
- B-# — Boring (Dug)

Utility Lines Are Per Existing Structures And Dig-safe Paint Marks At Time Of Survey.

Elevations Are Taken From A Portion Of Aerial Photography Supplied By The Town. Catch Basin Rim Elevations Shown On This Photography Was Used As A Basis For Elevations On This Plan By Averaging.

Property lines are approximate as taken from Vermont GIS data and fit to the features.

This field survey was completed on 4/11/13 using a Topcon Total Station.

Reference plan: "Sidewalk Layout Plan For Town Of Hartford – Church Street Sidewalk" by Pathways Consulting, LLC, dated 8/13/10.

GRAPHIC SCALE

40 0 20 40 80 160

(IN FEET)
1 inch = 40 ft.

Segment 2 — All Options

SURVEY LDY/BEG DESIGNED DRAWN BEG CHECKED LDY SCALE 1"=40'	SUMMIT ENGINEERING, INC Engineers • Surveyors • Planners • Landscape Architects 1233 Shelburne Road C2 South Burlington, VT 05403 (802) 858-5588	TOPOGRAPHIC SURVEY TOWN OF HARTFORD GATES STREET WHITE RIVER JCT., VT ©	DATE 4/26/13 DRAWING NO. B1 PROJECT NO. 8251

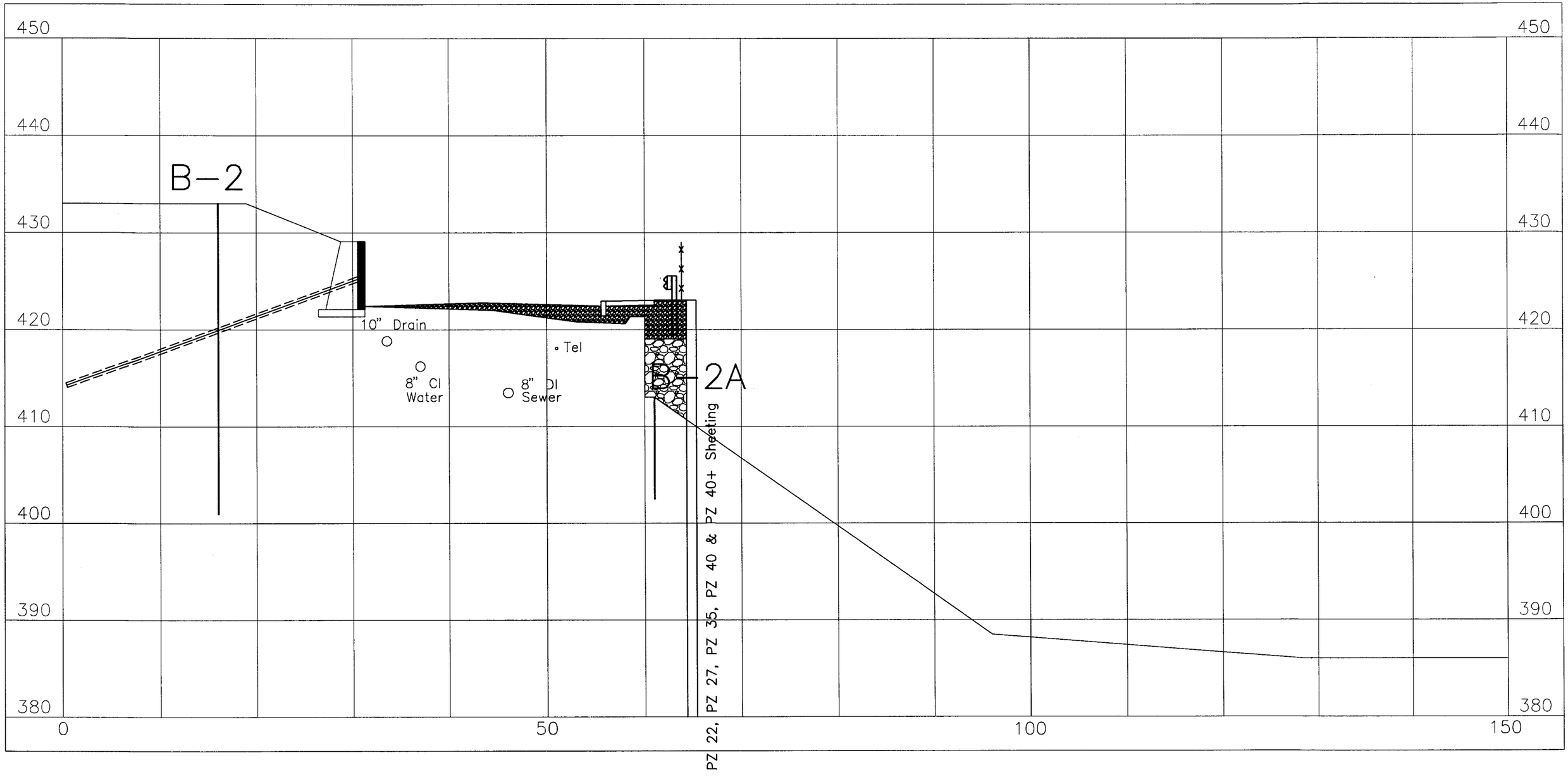

SECTION 2+55 (Option 5 – Cantilevered Sheeting)

SCALE: 1" = 10' HOR.
1" = 10' VERT.

SEGMENT 1 PROJECTED CONSTRUCTION COST (OPTION 5A)
COST FOR CANTILEVERED SHEETING ALONG UPPER GATE STREET AND FAIRVIEW TERRACE

ITEM	QUANTITY	UNIT	UNIT PRICE	AMOUNT	COMMENTS
General Mobilization	1	LS	$15,000.00	$15,000.00	
Clear & Grub (10'x500')	0.115	AC	$12,270.64	$1,411.12	
2'x4'x123' Concrete Demolition	36.44	CY	$289.32	$10,542.82	In-place CY
Haul	48	LCY	$9.00	$432.00	Loose CY (30% Fluff Factor)
Sheeting Mobilization	1.00	EA	$15,000.00	$15,000.00	
Cantilevered Sheeting	583.56	Tons	$2,100.00	$1,225,476.00	
Fine Crushed Gravel (427 CY)	778	Tons	$24.13	$18,773.14	
Dense Graded Crushed Stone	372	CY	$33.00	$12,276.00	In-place CY
New 6' Chain-link Fence	505	LF	$15.72	$7,938.60	
Easements & Legal	1	LS	$15,683.00	$15,683.00	Maximum
Resident Inspection	44.00	Days	$600.00	$26,400.00	2 Months
Traffic Control	44.00	Days	$650.00	$28,600.00	2 Months
Sub-total				**$1,377,532.68**	
10% Overhead & Profit				**$137,753.27**	
15% Engineering & Testing				**$206,629.90**	
25% Contingency				**$344,383.17**	
Total				**$2,066,299.03**	**2013 Dollars**

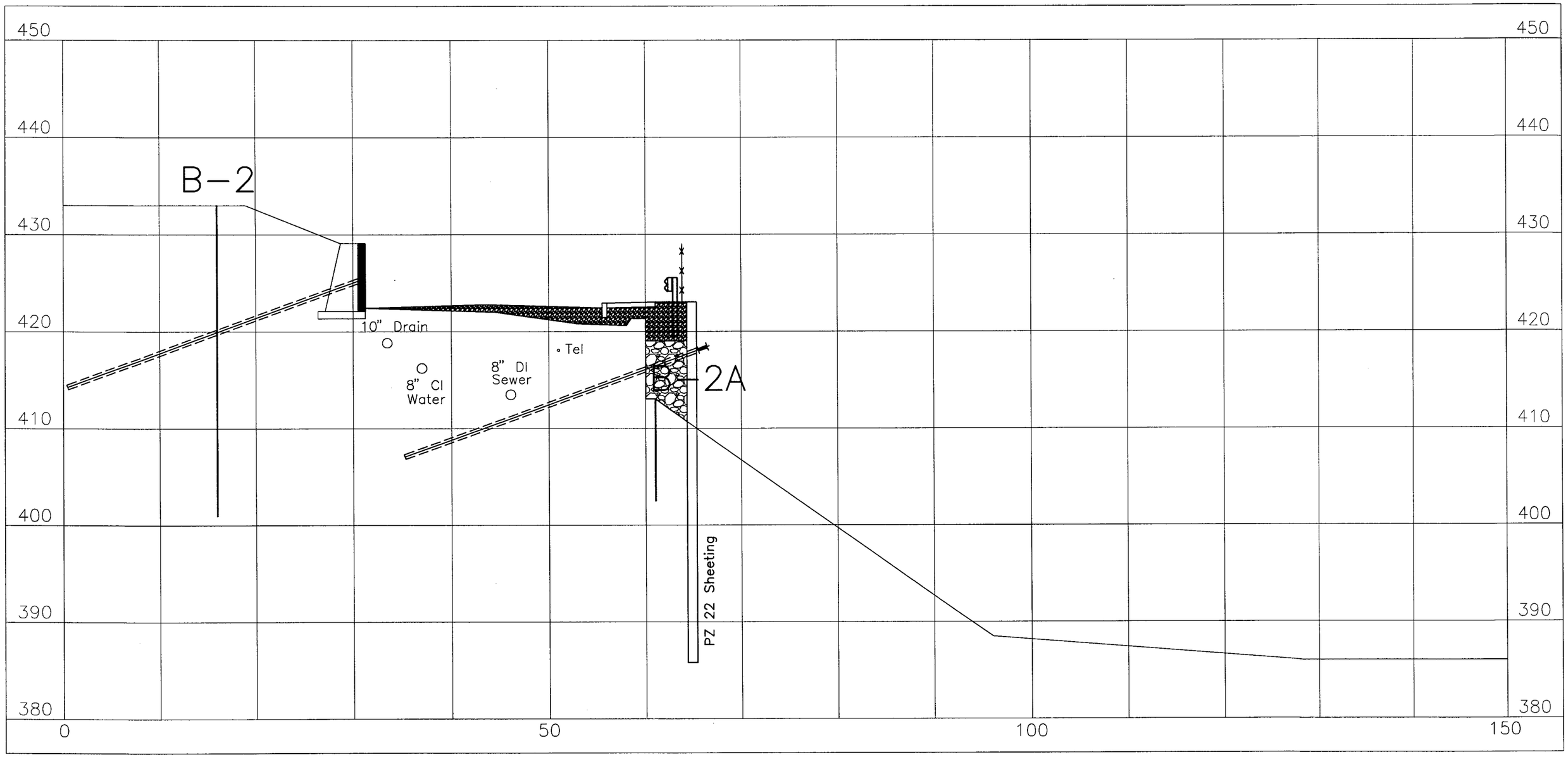

SECTION 2+55 (Option 6 – Anchored Sheeting)

SCALE: 1" = 10' HOR.
1" = 10' VERT.

SEGMENT 1 PROJECTED CONSTRUCTION COST (OPTION 6A)
COST FOR SHEETING & TIEBACKS ALONG UPPER GATE STREET AND FAIRVIEW TERRACE

ITEM	QUANTITY	UNIT	UNIT PRICE	AMOUNT	COMMENTS
General Mobilization	1	LS	$15,000.00	$15,000.00	
Clear & Grub (20'x500')	0.230	AC	$12,270.64	$2,822.25	
2'x4'x123' Concrete Demolition	36.44	CY	$289.32	$10,542.82	In-place CY
Haul	48	LCY	$9.00	$432.00	Loose CY (30% Fluff Factor)
Sheeting Mobilization	1.00	EA	$15,000.00	$15,000.00	
Cantilevered PZ 22 Sheeting	166.22	Tons	$2,100.00	$349,062.00	
DBL MC12x40 Gr 50 Wales	44,000	LBS	$4.66	$205,040.00	10% Added for Connections
Tieback Mobilization	1	EA	$15,000.00	$15,000.00	
60-Kip Tiebacks	16	EA	$5,120.00	$81,920.00	(54+10) LF @ $80/LF
50-Kip Tiebacks	10	EA	$4,400.00	$44,000.00	(45+10) LF @ $80/LF
40-Kip Tiebacks	9	EA	$3,680.00	$33,120.00	(36+10) LF @ $80/LF
30-Kip Tiebacks	7	EA	$2,960.00	$20,720.00	(27+10) LF @ $80/LF
20-Kip Tiebacks	9	EA	$2,240.00	$20,160.00	(18+10) LF @ $80/LF
Fine Crushed Gravel (427 CY)	778	Tons	$24.13	$18,773.14	
Dense Graded Crushed Stone	372	CY	$33.00	$12,276.00	In-place CY
New 6' Chain-link Fence	505	LF	$15.72	$7,938.60	
Easements & Legal	1	LS	$15,683.00	$15,683.00	Maximum
Resident Inspection	44.00	Days	$600.00	$26,400.00	2 Months
Traffic Control	44.00	Days	$650.00	$28,600.00	2 Months
Sub-total				**$922,489.81**	
10% Overhead & Profit				**$92,248.98**	
15% Engineering & Testing				**$138,373.47**	
25% Contingency				**$230,622.45**	
Total				**$1,383,734.71**	**2013 Dollars**

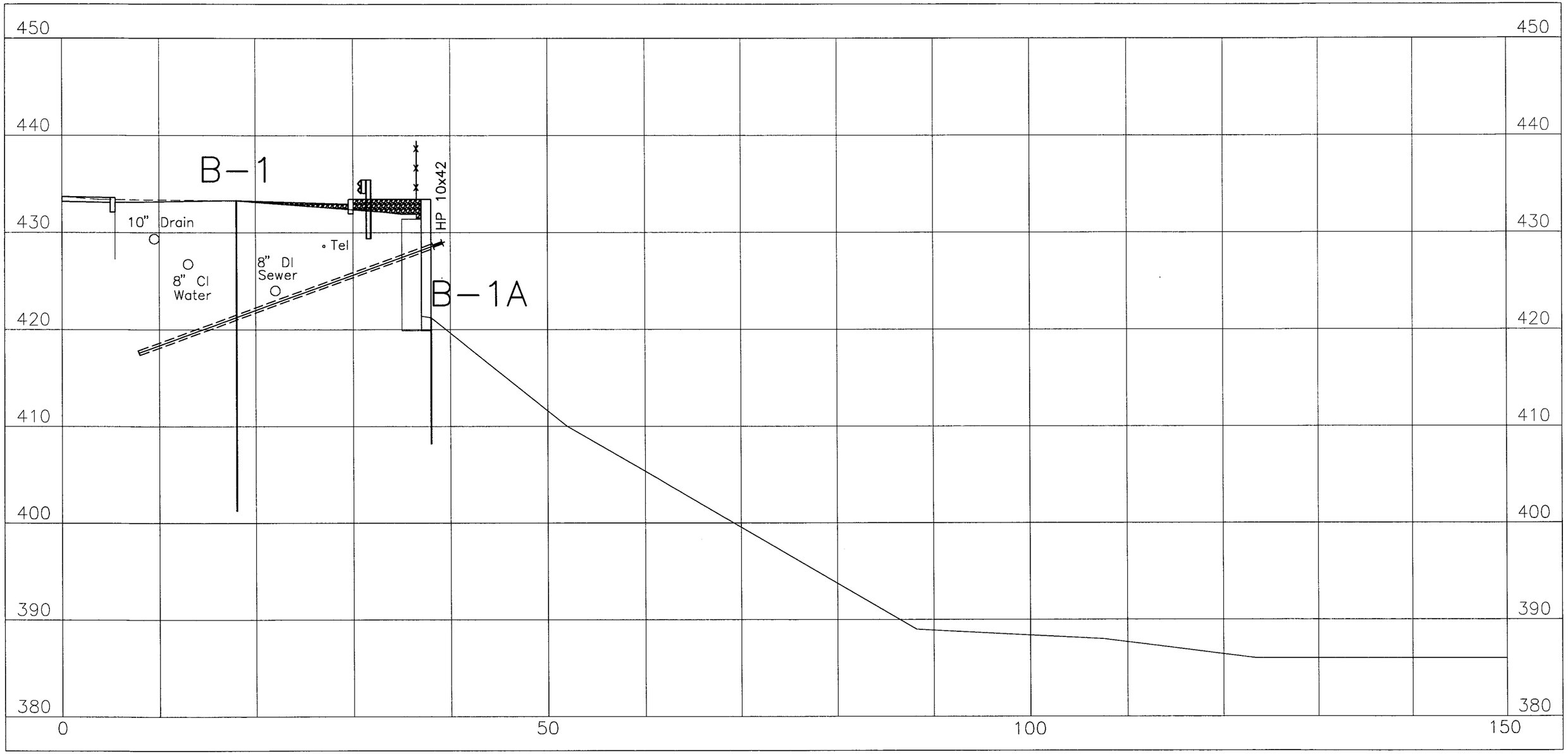

SECTION 0+94.50 (Option 7 – Mixed Anchoring)

SCALE: 1" = 10' HOR.
1" = 10' VERT.

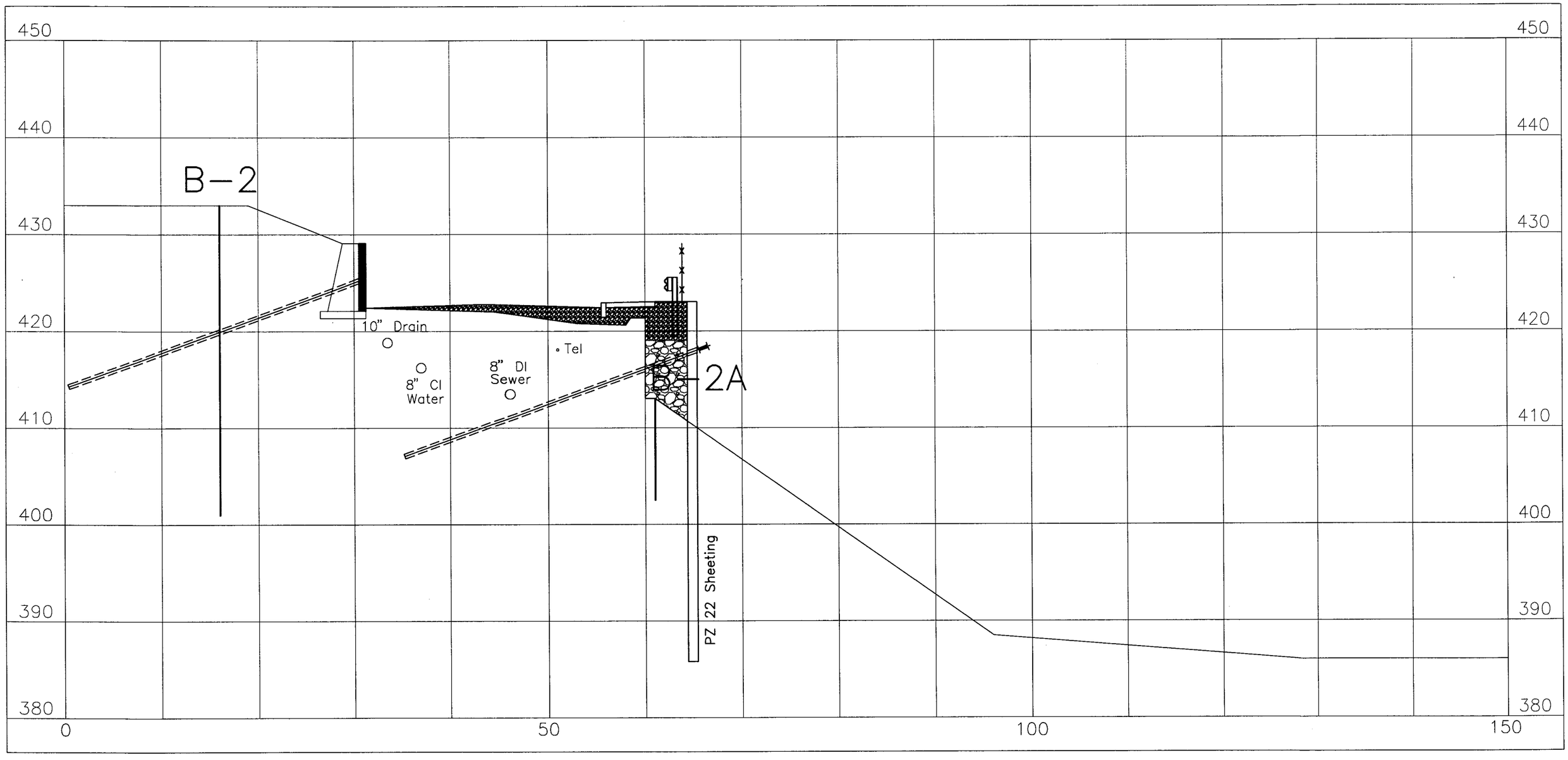

SECTION 2+55 (Option 7 – Mixed Anchoring)

SCALE: 1" = 10' HOR.
1" = 10' VERT.

SEGMENT 1 PROJECTED CONSTRUCTION COST (OPTION 7A)
COST FOR SOLDIER PILES & TIEBACKS ALONG FAIRVIEW TERRACE
COST FOR SHEETING & TIEBACKS ALONG UPPER GATE STREET

ITEM	QUANTITY	UNIT	UNIT PRICE	AMOUNT	COMMENTS
General Mobilization	1	LS	$15,000.00	$15,000.00	
Clear & Grub (20'x500')	0.230	AC	$12,270.64	$2,822.25	
2'x4'x123' Concrete Demolition	36.44	CY	$289.32	$10,542.82	In-place CY
Haul	48	LCY	$9.00	$432.00	Loose CY (30% Fluff Factor)
10"x24" Cores	50	EA	$183.56	$9,178.00	
HP10x42x194' Soldier Piles	8,963	LBS	$4.66	$41,767.58	10% Added for Connections
12"x1,938 SF Structural Concrete	72	CY	$547.08	$39,389.76	
Rebar	11,625	LBS	$1.17	$13,601.25	
Sheeting Mobilization	1	EA	$15,000.00	$15,000.00	
Cantilevered PZ 22 Sheeting	101.05	Tons	$2,100.00	$212,205.00	
DBL MC12x40 Gr 50 Wales	29,040	LBS	$4.66	$135,326.40	10% Added for Connections
Tieback Mobilization	1	EA	$15,000.00	$15,000.00	
60-Kip Tiebacks	16	EA	$5,120.00	$81,920.00	(54+10) LF @ $80/LF
50-Kip Tiebacks	10	EA	$4,400.00	$44,000.00	(45+10) LF @ $80/LF
40-Kip Tiebacks	9	EA	$3,680.00	$33,120.00	(36+10) LF @ $80/LF
30-Kip Tiebacks	7	EA	$2,960.00	$20,720.00	(27+10) LF @ $80/LF
20-Kip Tiebacks	9	EA	$2,240.00	$20,160.00	(18+10) LF @ $80/LF
Fine Crushed Gravel (410 CY)	748	Tons	$24.13	$18,049.24	
Dense Graded Crushed Stone	268	CY	$33.00	$8,844.00	In-place CY
New 6' Chain-link Fence	505	LF	$15.72	$7,938.60	
Easements & Legal	1	LS	$15,683.00	$15,683.00	Maximum
Resident Inspection	44.00	Days	$600.00	$26,400.00	2 Months
Traffic Control	44.00	Days	$650.00	$28,600.00	2 Months
Sub-total				**$800,699.90**	
10% Overhead & Profit				**$80,069.99**	
15% Engineering & Testing				**$120,104.98**	
25% Contingency				**$200,174.97**	
Total				**$1,201,049.85**	**2013 Dollars**

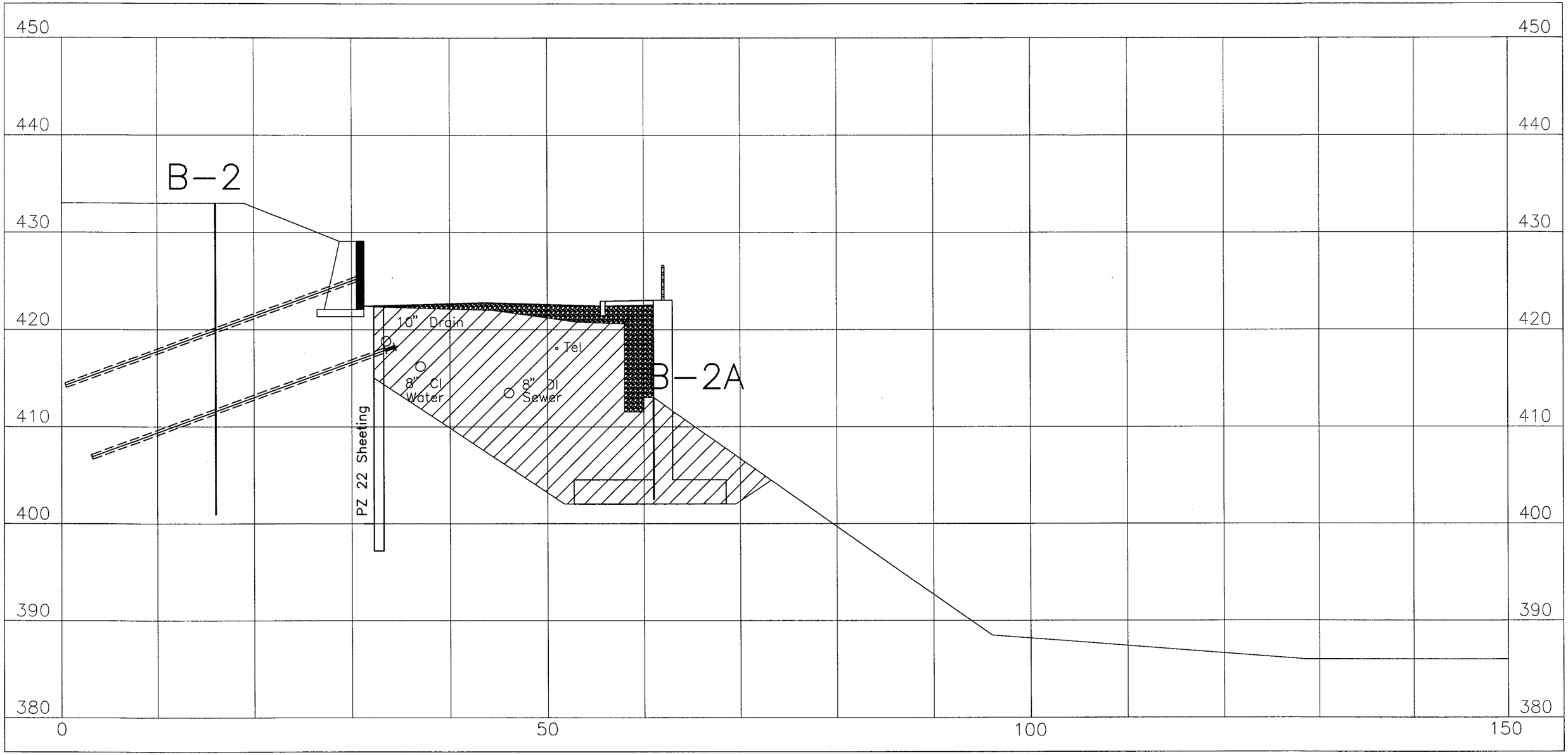

SECTION 2+55 (Option 8 – New Concrete Wall)

SCALE: 1" = 10' HOR.
1" = 10' VERT.

SEGMENT 1 PROJECTED CONSTRUCTION COST (OPTION 8)
COST FOR NEW CONCRETE WALL ALONG UPPER GATE STREET & FAIRVIEW TERRACE PLUS NEW INFRASTRUCTURE

ITEM	QUANTITY	UNIT	UNIT PRICE	AMOUNT	COMMENTS
General Mobilization	1	LS	$15,000.00	$15,000.00	
Silt Fence	510	LF	$3.08	$1,570.80	
Clear & Grub (10'x500')	0.115	AC	$12,270.64	$1,411.12	
6"x14,072 SF Remove Pavement	261	CY	$15.97	$4,168.17	
6"x2,765 SF Remove Sidewalk	51	CY	$15.97	$814.47	
Shore Wall Segment 4 (Options 2 & 3)	1	LS	$270,086.75	$270,086.75	
Concrete Demolition	435.36	CY	$289.32	$125,958.36	In-place CY
General Excavation (7,404-261-51)	7,092	CY	$7.09	$50,282.28	In-place CY
Haul	10,191	LCY	$9.00	$91,716.30	Loose CY (30% Fluff Factor)
Structural Concrete	1,016.20	CY	$547.08	$555,942.70	
Rebar	94,315.00	LBS	$1.17	$110,348.55	
Granular Fill	6,263	CY	$26.64	$166,846.32	
18"x16,837 SF Fine Crushed Gravel	1,704.75	Tons	$24.13	$41,135.62	VTAOT 704.05
Remove 12" Concrete Drain	590	LF	$10.15	$5,988.50	
New 15" PE Drain	590	LF	$37.50	$22,125.00	
Remove Catch Basins	4	EA	$391.00	$1,564.00	
New Catch Basins	5	EA	$2,993.00	$14,965.00	
Remove 8" CI Waterline	570	LF	$10.15	$5,785.50	
New 8" DI Waterline	570	LF	$47.00	$26,790.00	
8"x8"x8" Wet-tap	3	EA	$2,500.00	$7,500.00	
New 8" Valves	1	EA	$1,725.00	$1,725.00	
Remove Hydrant Assembly	1	EA	$630.00	$630.00	
New Hydrant Assembly	1	EA	$5,000.00	$5,000.00	
Remove 8" DI Sewer	550	LF	$10.15	$5,582.50	
New 8" DI Sewer	550	LF	$40.00	$22,000.00	
Remove SS Manholes	2	EA	$391.00	$782.00	
New SS Manholes	3	EA	$3,103.00	$9,309.00	
5" Concrete Sidewalk (2,514 SF)	280.00	SY	$49.85	$13,958.00	
3" New Pavement (14,072 SF)	263.85	Tons	$79.40	$20,949.69	
New Granite Curb	700	LF	$25.95	$18,165.00	
New Topsoil (4,853 SF)	90	CY	$27.40	$2,466.00	
Restoration (4,853 SF)	540	SY	$5.00	$2,700.00	
Jute Matting (4,853 SF)	540	SY	$2.54	$1,371.60	
Remove Existing Railing	498	LF	$7.59	$3,779.82	
New Bridge Rail	498	LF	$181.19	$90,232.62	
Historic Light-poles	4	EA	$5,400.00	$21,600.00	
Light-pole bases	4	EA	$1,000.00	$4,000.00	
Lighting Conduit	600	LF	$16.00	$9,600.00	
Easements & Legal	1	LS	$15,683.00	$15,683.00	Maximum
Resident Inspection	110.00	Days	$600.00	$66,000.00	5 Months
Traffic Control	110.00	Days	$650.00	$71,500.00	5 Months
Sub-total				**$1,907,033.66**	
10% Overhead & Profit				**$190,703.37**	
15% Engineering & Testing				**$286,055.05**	
25% Contingency				**$476,758.42**	
Total				**$2,860,550.49**	**2013 Dollars**

APPENDIX E

SEGMENT 2 (Option T1 – Temporary Guard Rail)

SCALE: 1" = 10' HOR.
1" = 10' VERT.

SEGMENT 2 PROJECTED CONSTRUCTION COST (OPTION T1)
INSTALL NEW GUARD RAIL TO CREATE PEDESTRIAN WAY

ITEM	QUANTITY	UNIT	UNIT PRICE	AMOUNT	COMMENTS
General Mobilization	1	LS	$500.00	$500.00	
Temporary Guard Rail	145	LF	$15.94	$2,311.30	
Traffic Control	1.00	Day	$650.00	$650.00	1 Day
Sub-total				**$3,461.30**	
10% Overhead & Profit				**$346.13**	
15% Engineering & Testing				**$519.20**	
25% Contingency				**$865.33**	
Total				**$5,191.95**	**2013 Dollars**

SEGMENT 2 PROJECTED CONSTRUCTION COST OPTIONS (08/30/2013)

SCOPE ITEM	PROJECTED COST	SEGMENT 2 OPTION DESCRIPTION
Option 1	$512,297	Install cantilevered sheeting on the downhill side of the existing wall and filling the annular space between the sheeting and wall with dense-graded crushed stone. This option includes the cost to repair the existing distessed pavement, install a new sidewalk, lighting and guardrail, plus upgrade the existing 8" waterline, 8" sewer line and 12" storm drain line. This option encroaches on the Church property by approximately 2 to 3 feet. Vibration from this option may add to the distress of the existing roadway.
Option 2	$557,934	Install tiebacks into the soil behind the existing concrete wall and encapsulate the new tiebacks using a structural reinforced concrete face. This option includes the cost to repair the existing distessed pavement, install a new sidewalk, lighting and bridge rail, plus upgrade the existing 8" waterline, 8" sewer line and 12" storm drain line. This option encroaches on the Church property by approximately 1 foot.
Option 3	$645,966	Remove the existing wall and construct a new cantilevered concrete retaining wall. This option includes upgrading all municipal utilities within the roadway, as well as, replacing the existing distressed pavement plus adding lighting and a new bridge rail. This option results in no permanent encroachment on the Church but results in maximum disruption to the existing roadway and potential construction coordination and homeowner access issues.

Note 1: For Options 1 & 2, the costs may be reduced by approximately $387,000 if improving the roadway, sidewalk, guardrail & utilities is not done.

Note 2: For Option 3, the cost of improving the roadway, sidewalk, guardrail & utilities is required due to the extent of excavation for the new wall.

Segment 1 — Options 5 to 8

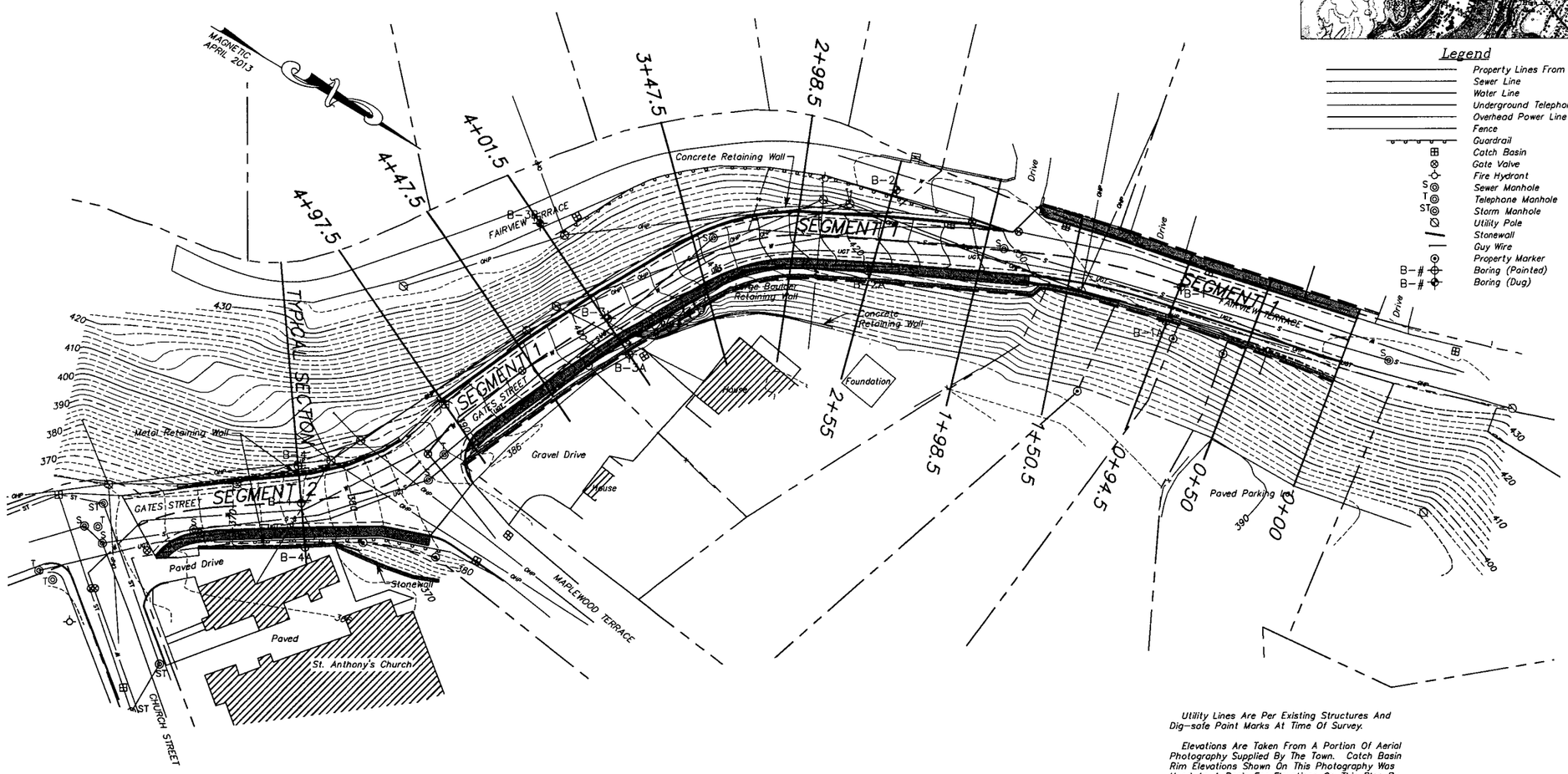

Location Map

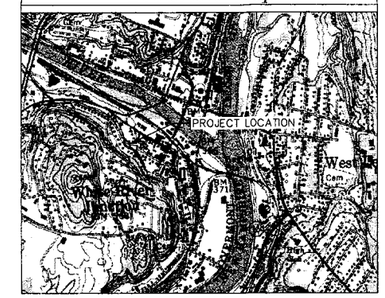

Legend

- Property Lines From GIS Info.
- Sewer Line
- Water Line
- Underground Telephone Line
- Overhead Power Line
- Fence
- Guardrail
- Catch Basin
- Gate Valve
- Fire Hydrant
- S — Sewer Manhole
- T — Telephone Manhole
- ST — Storm Manhole
- Utility Pole
- Stonewall
- Guy Wire
- Property Marker
- B-# — Boring (Painted)
- B-# — Boring (Dug)

Utility Lines Are Per Existing Structures And Dig-safe Paint Marks At Time Of Survey.

Elevations Are Taken From A Portion Of Aerial Photography Supplied By The Town. Catch Basin Rim Elevations Shown On This Photography Was Used As A Basis For Elevations On This Plan By Averaging.

Property lines are approximate as taken from Vermont GIS data and fit to the features.

This field survey was completed on 4/11/13 using a Topcon Total Station.

Reference plan: "Sidewalk Layout Plan For Town Of Hartford – Church Street Sidewalk" by Pathways Consulting, LLC, dated 8/13/10.

GRAPHIC SCALE

40 0 20 40 80 160

(IN FEET)
1 inch = 40 ft.

Segment 2 — All Options

SURVEY LDY/BEG DESIGNED DRAWN BEG CHECKED LDY SCALE 1"=40'	SUMMIT ENGINEERING, INC Engineers • Surveyors • Planners • Landscape Architects 1233 Shelburne Road C2 South Burlington, VT 05403 (802) 858-5588	TOPOGRAPHIC SURVEY TOWN OF HARTFORD GATES STREET WHITE RIVER JCT., VT ©	DATE 4/26/13 DRAWING NO. B1 PROJECT NO. 8251

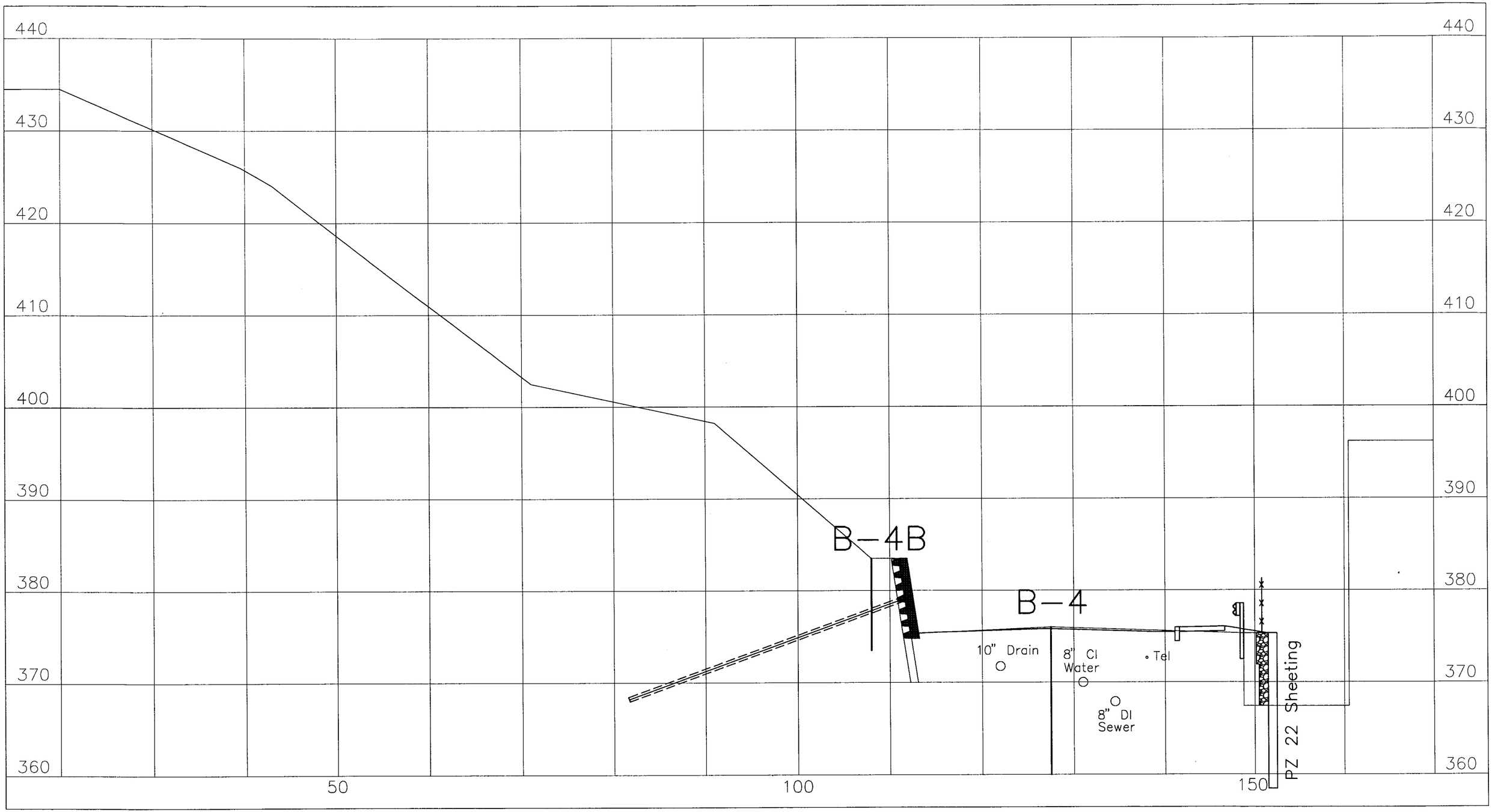

SEGMENT 2 (Option 1 – Full Height Sheeting)

SCALE: 1" = 10' HOR.
1" = 10' VERT.

SEGMENT 2 PROJECTED CONSTRUCTION COST (OPTION 1)
COST FOR CANTILEVERED SHEETING ALONG LOWER GATE STREET

ITEM	QUANTITY	UNIT	UNIT PRICE	AMOUNT	COMMENTS
General Mobilization	1	LS	$15,000.00	$15,000.00	
Sheeting Mobilization	1	EA	$15,000.00	$15,000.00	
1810.5 SF PZ 22 Gr 50 Sheeting	19.92	Tons	$2,100.00	$41,832.00	
Crushed Stone	35	CY	$33.00	$1,155.00	
6"x5,252 SF Remove Pavement	98	CY	$15.97	$1,565.06	
Shore Wall Segment 3 (Option 2)	1	LS	$87,247.21	$87,247.21	
Gravel Excavation (18"x5,252 SF)	292	CY	$7.09	$2,070.28	In-place CY
Drain Trench Excavation (3'x3'x160')	54	CY	$12.64	$682.56	In-place CY
Waterline Trench Excavation (3'x5'x160')	89	CY	$12.64	$1,124.96	In-place CY
Sewer Trench Excavation (3'x5'x175')	98	CY	$12.64	$1,238.72	In-place CY
Haul	820	LCY	$9.00	$7,382.70	Loose CY (30% Fluff)
Granular Fill (631-292-42)	297	CY	$26.64	$7,912.08	
18"x5,252 SF Fine Crushed Gravel	531.77	Tons	$24.13	$12,831.61	VTAOT 704.05
Remove 12" Concrete Drain	160	LF	$10.15	$1,624.00	
New 15" PE Drain	160	LF	$37.50	$6,000.00	
Remove Catch Basins	0	EA	$391.00	$0.00	
New Catch Basins	1	EA	$2,993.00	$2,993.00	
Remove 8" CI Waterline	160	LF	$10.15	$1,624.00	
New 8" DI Waterline	160	LF	$47.00	$7,520.00	
8"x8"x8" Wet-tap	1	EA	$2,500.00	$2,500.00	
New 8" Valves	1	EA	$1,725.00	$1,725.00	
Remove Hydrant Assembly	0	EA	$630.00	$0.00	
New Hydrant Assembly	1	EA	$3,000.00	$3,000.00	
Remove 8" DI Sewer	175	LF	$10.15	$1,776.25	
New 8" DI Sewer	175	LF	$40.00	$7,000.00	
Remove SS Manholes	1	EA	$391.00	$391.00	
New SS Manholes	1	EA	$3,103.00	$3,103.00	
Remove Existing Guard Rail	200	LF	$7.59	$1,518.00	
New Guard Rail	200	LF	$15.94	$3,188.00	
New Granite Curb	200	LF	$25.95	$5,190.00	
5" Concrete Sidewalk (727 SF)	80.75	SY	$49.85	$4,025.39	
3" New Pavement (4,452 SF)	83.48	Tons	$79.40	$6,628.31	
Historic Light-poles	2	EA	$5,400.00	$10,800.00	
Light-pole bases	2	EA	$1,000.00	$2,000.00	
Lighting Conduit	200	LF	$16.00	$3,200.00	
Easements & Legal	1	LS	$15,683.00	$15,683.00	Maximum
Resident Inspection	44.00	Days	$600.00	$26,400.00	2 Months
Traffic Control	44.00	Days	$650.00	$28,600.00	2 Months
Sub-total				**$341,531.13**	
10% Overhead & Profit				**$34,153.11**	
15% Engineering & Testing				**$51,229.67**	
25% Contingency				**$85,382.78**	
Total				**$512,296.69**	**2013 Dollars**

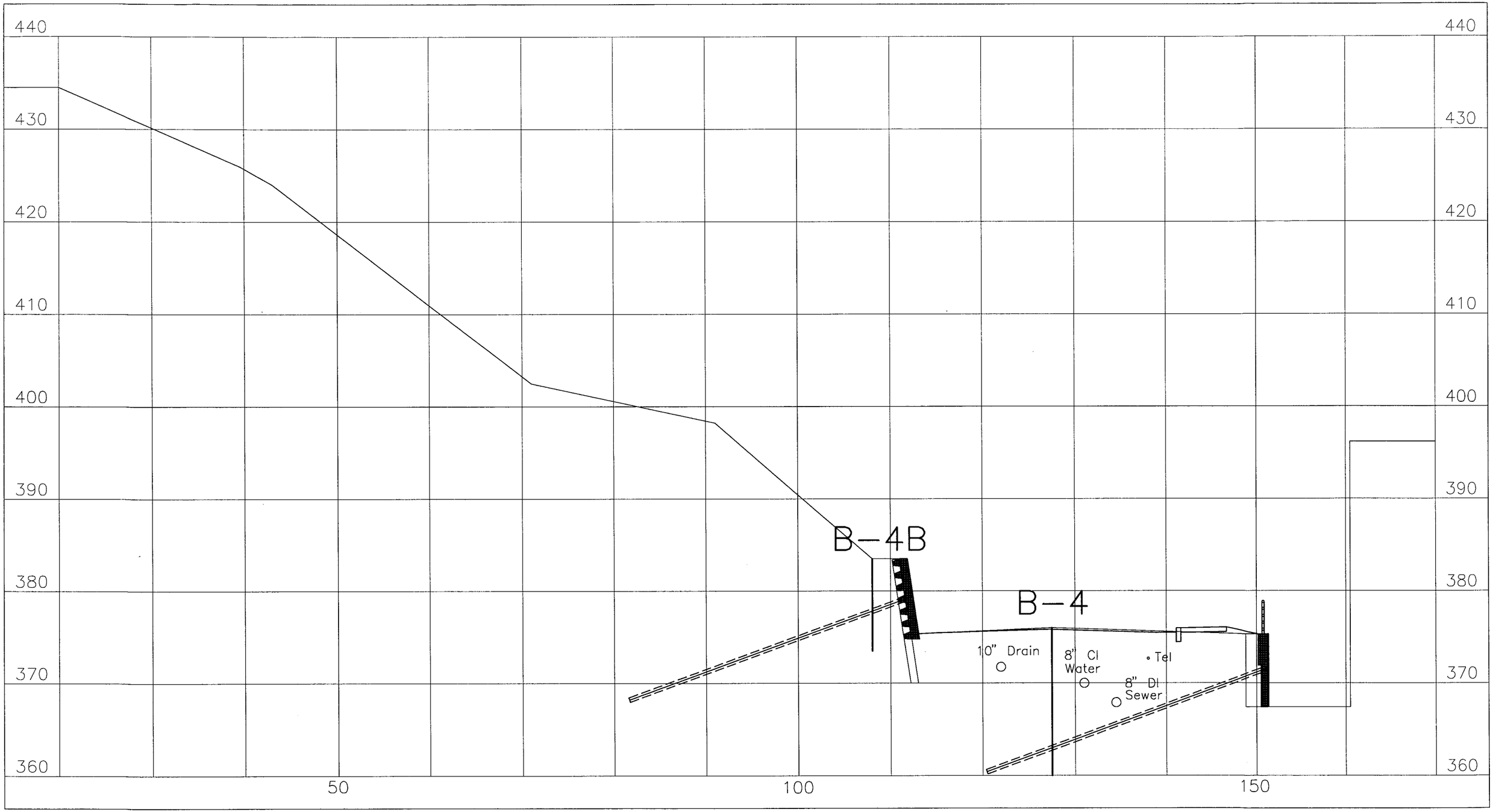

SEGMENT 2 (Option 2 – Tiebacks & Concrete)

SCALE: 1" = 10' HOR.
1" = 10' VERT.

SEGMENT 2 PROJECTED CONSTRUCTION COST (OPTION 2)
COST FOR TIEBACKS & NEW CONCRETE FACING ALONG LOWER GATE STREET

ITEM	QUANTITY	UNIT	UNIT PRICE	AMOUNT	COMMENTS
General Mobilization	1	LS	$15,000.00	$15,000.00	
Tieback Mobilization	1	EA	$15,000.00	$15,000.00	
10"x36" Cores	18	EA	$242.60	$4,366.80	
20-Kip Tiebacks	18	EA	$2,200.00	$39,600.00	
12"x736 SF Structural Concrete	27.26	CY	$547.08	$14,913.40	
Rebar	4,416	LB	$1.17	$14,531.40	
6"x5,252 SF Remove Pavement	98	CY	$15.97	$1,565.06	
Shore Wall Segment 3 (Option 2)	1	LS	$87,247.21	$87,247.21	
Gravel Excavation (18"x5,252 SF)	292	CY	$7.09	$2,070.28	In-place CY
Drain Trench Excavation (3'x3'x160')	54	CY	$12.64	$682.56	In-place CY
Waterline Trench Excavation (3'x5'x160')	89	CY	$12.64	$1,124.96	In-place CY
Sewer Trench Excavation (3'x5'x175')	98	CY	$12.64	$1,238.72	In-place CY
Haul	820	LCY	$9.00	$7,382.70	Loose CY (30% Fluff)
Granular Fill (631-292-42)	297	CY	$26.64	$7,912.08	
18"x5,252 SF Fine Crushed Gravel	531.77	Tons	$24.13	$12,831.61	VTAOT 704.05
Remove 12" Concrete Drain	160	LF	$10.15	$1,624.00	
New 15" PE Drain	160	LF	$37.50	$6,000.00	
Remove Catch Basins	0	EA	$391.00	$0.00	
New Catch Basins	1	EA	$2,993.00	$2,993.00	
Remove 8" CI Waterline	160	LF	$10.15	$1,624.00	
New 8" DI Waterline	160	LF	$47.00	$7,520.00	
8"x8"x8" Wet-tap	1	EA	$2,500.00	$2,500.00	
New 8" Valves	1	EA	$1,725.00	$1,725.00	
Remove Hydrant Assembly	0	EA	$630.00	$0.00	
New Hydrant Assembly	1	EA	$3,000.00	$3,000.00	
Remove 8" DI Sewer	175	LF	$10.15	$1,776.25	
New 8" DI Sewer	175	LF	$40.00	$7,000.00	
Remove SS Manholes	1	EA	$391.00	$391.00	
New SS Manholes	1	EA	$3,103.00	$3,103.00	
Remove Existing Guard Rail	200	LF	$7.59	$1,518.00	
New Guard Rail	200	LF	$15.94	$3,188.00	
New Granite Curb	200	LF	$25.95	$5,190.00	
5" Concrete Sidewalk (727 SF)	80.75	SY	$49.85	$4,025.39	
3" New Pavement (4,452 SF)	83.48	Tons	$79.40	$6,628.31	
Historic Light-poles	2	EA	$5,400.00	$10,800.00	
Light-pole bases	2	EA	$1,000.00	$2,000.00	
Lighting Conduit	200	LF	$16.00	$3,200.00	
Easements & Legal	1	LS	$15,683.00	$15,683.00	Maximum
Resident Inspection	44.00	Days	$600.00	$26,400.00	2 Months
Traffic Control	44.00	Days	$650.00	$28,600.00	2 Months
Sub-total				**$371,955.73**	
10% Overhead & Profit				**$37,195.57**	
15% Engineering & Testing				**$55,793.36**	
25% Contingency				**$92,988.93**	
Total				**$557,933.60**	**2013 Dollars**

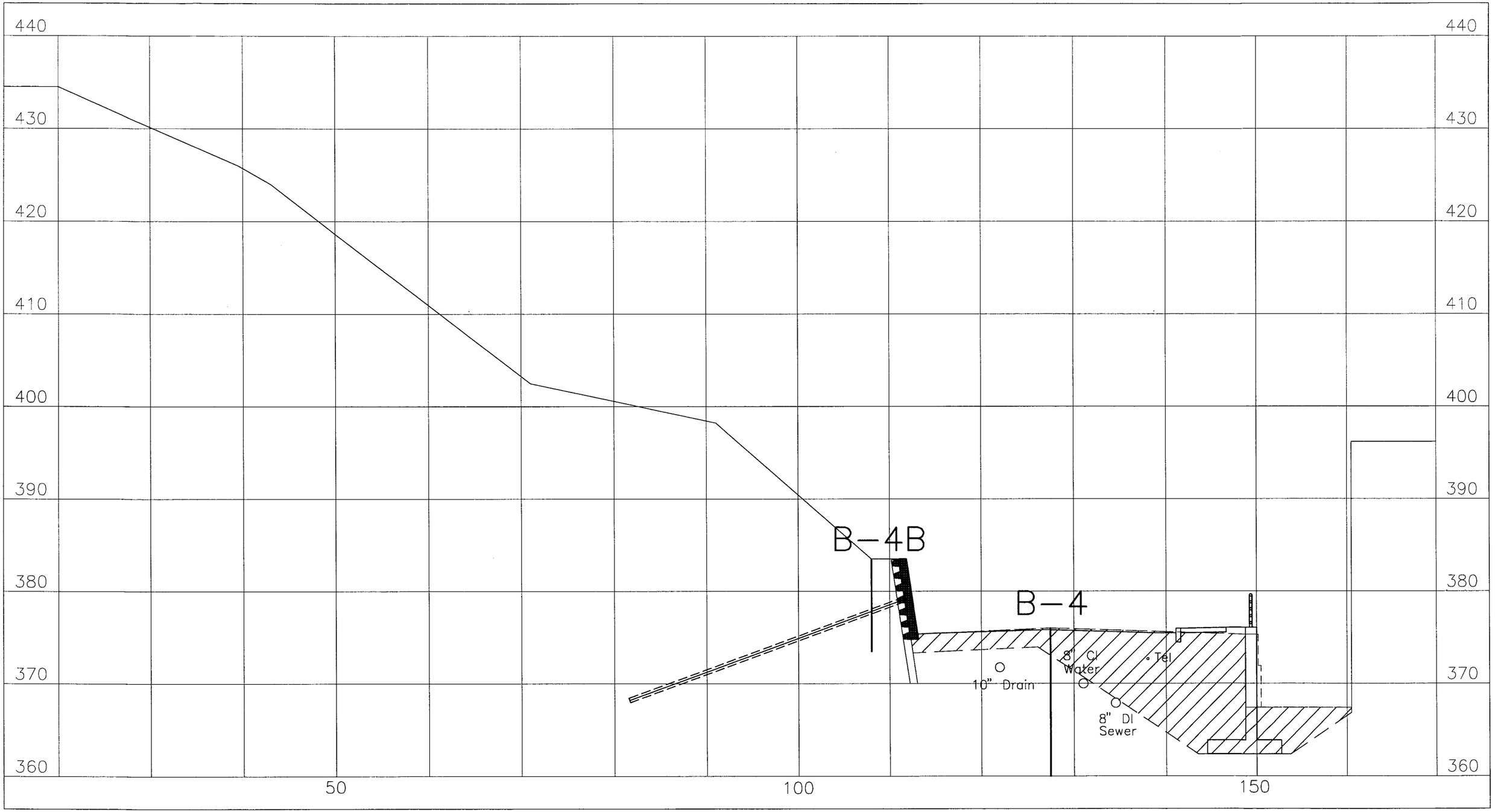

SEGMENT 2 (Option 3 – Cantilevered Concrete)

SCALE: 1" = 10' HOR.
1" = 10' VERT.

SEGMENT 2 PROJECTED CONSTRUCTION COST (OPTION 3)
COST FOR NEW CONCRETE RETAINING WALL ALONG LOWER GATE STREET

ITEM	QUANTITY	UNIT	UNIT PRICE	AMOUNT	COMMENTS
General Mobilization	1	LS	$15,000.00	$15,000.00	
3"x1,167 SF Remove Pavement	11	CY	$15.97	$175.67	
6"x5,528 SF Remove Pavement	102	CY	$15.97	$1,628.94	
Concrete Demolition	61.4	CY	$289.32	$17,764.25	In-place CY
9"x1,167 SF Gravel Excavation	32	CY	$7.09	$226.88	In-place CY
18"x5,528 SF Gravel Excavation	307	CY	$7.09	$2,176.63	In-place CY
General Excavation	739	CY	$7.09	$5,236.67	In-place CY
Drain Trench Excavation (3'x3'x160')	54	CY	$12.64	$682.56	In-place CY
Haul	1,291	LCY	$9.00	$11,618.10	Loose CY (30% Fluff)
Structural Concrete	103.34	CY	$547.08	$56,535.25	
Rebar	8,203.00	LBS	$1.17	$9,597.51	
Granular Fill	748	CY	$26.64	$19,918.73	
9"x1,167 SF Fine Crushed Gravel	59.00	Tons	$24.13	$1,423.67	VTAOT 704.05
18"x5,528 SF Fine Crushed Gravel	560.00	Tons	$24.13	$13,512.80	VTAOT 704.05
Shore Wall Segment 3 (Option 2)	1	LS	$87,247.21	$87,247.21	
Remove 12" Concrete Drain	160	LF	$10.15	$1,624.00	
New 15" PE Drain	160	LF	$37.50	$6,000.00	
Remove Catch Basins	0	EA	$391.00	$0.00	
New Catch Basins	1	EA	$2,993.00	$2,993.00	
Remove 8" CI Waterline	160	LF	$10.15	$1,624.00	
New 8" DI Waterline	160	LF	$47.00	$7,520.00	
8"x8"x8" Wet-tap	1	EA	$2,500.00	$2,500.00	
New 8" Valves	1	EA	$1,725.00	$1,725.00	
Remove Hydrant Assembly	0	EA	$630.00	$0.00	
New Hydrant Assembly	1	EA	$3,000.00	$3,000.00	
Remove 8" DI Sewer	175	LF	$10.15	$1,776.25	
New 8" DI Sewer	175	LF	$40.00	$7,000.00	
Remove SS Manholes	1	EA	$391.00	$391.00	
New SS Manholes	1	EA	$3,103.00	$3,103.00	
Remove Existing Guard Rail	200	LF	$7.59	$1,518.00	
New 6' Chain-link Fence	128	LF	$15.72	$2,012.16	
New Bridge Rail	72	LF	$181.19	$13,045.68	
New Guard Rail	128	LF	$15.94	$2,040.32	
New Granite Curb	200	LF	$25.95	$5,190.00	
5" Concrete Sidewalk (727 SF)	80.75	SY	$49.85	$4,025.39	
3" New Pavement (4,452 SF)	83.48	Tons	$79.40	$6,628.31	
Historic Light-poles	2	EA	$5,400.00	$10,800.00	
Light-pole bases	2	EA	$1,000.00	$2,000.00	
Lighting Conduit	200	LF	$16.00	$3,200.00	
Easements & Legal	1	LS	$15,683.00	$15,683.00	Maximum
Resident Inspection	66.00	Days	$600.00	$39,600.00	3 Months
Traffic Control	66.00	Days	$650.00	$42,900.00	3 Months
Sub-total				**$430,643.98**	
10% Overhead & Profit				**$43,064.40**	
15% Engineering & Testing				**$64,596.60**	
25% Contingency				**$107,660.99**	
Total				**$645,965.97**	**2013 Dollars**